GAMMA

2018

KAREL TECHNIK

Innovation Creates Future

www.kareltechnik.com

KAREL
TECHNIK

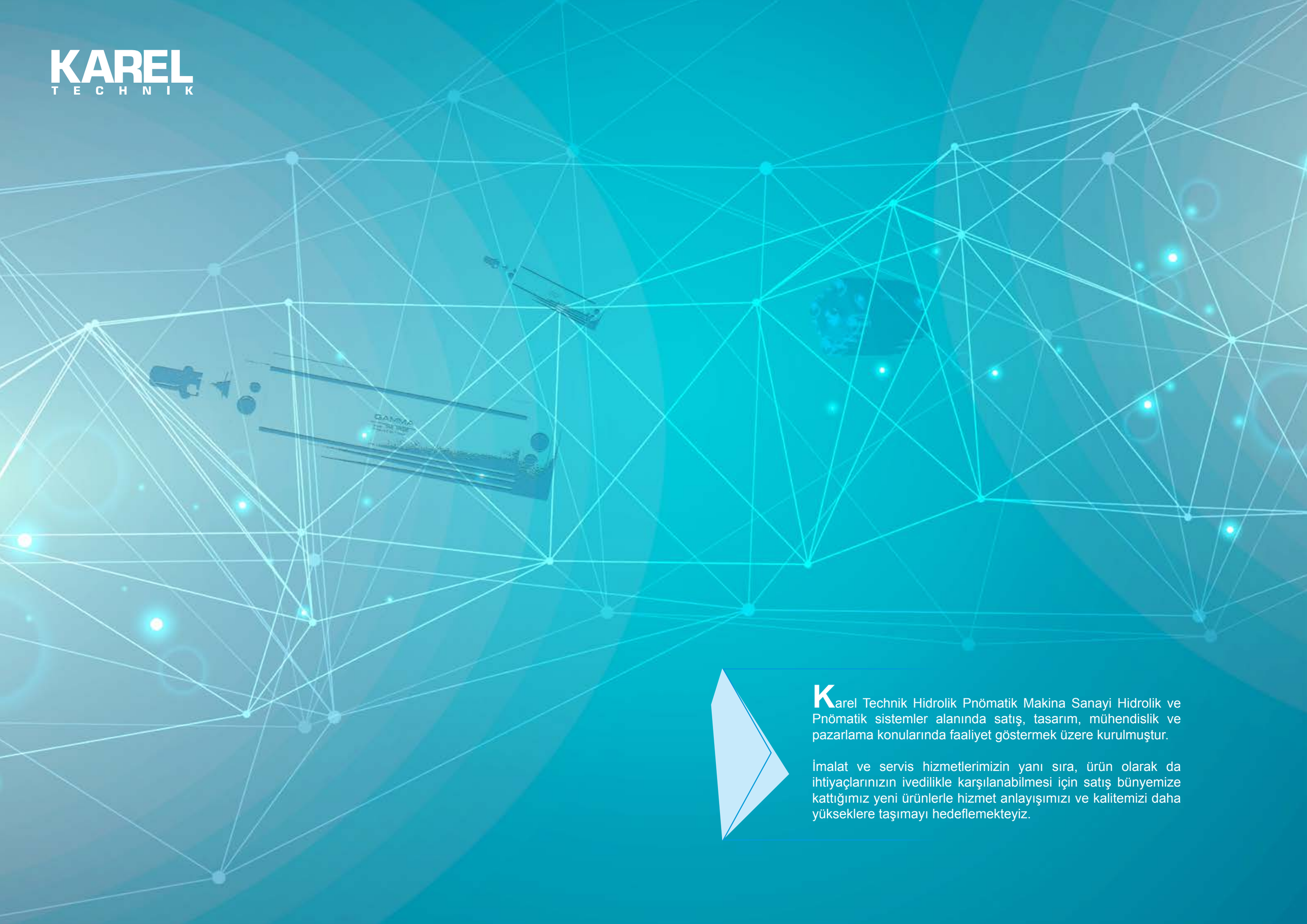

Karel Technik Hidrolik Pnömatik Makina Sanayi Hidrolik ve Pnömatik sistemler alanında satış, tasarım, mühendislik ve pazarlama konularında faaliyet göstermek üzere kurulmuştur.

İmalat ve servis hizmetlerimizin yanı sıra, ürün olarak da ihtiyaçlarınızın ivedilikle karşılanabilmesi için satış bünyemize kattığımız yeni ürünlerle hizmet anlayışımızı ve kalitemizi daha yükseklere taşımayı hedeflemekteyiz.

DNC Series ISO6431 Standard Cylinder

DNC 50 × 100

MDNC 50 × 100

TDNC 50 × 100

Ordering Code

□	DNC	50 ×	100	– 25	– S	– □
Tube Type	**Series Code**	**Cylinder Bore**	**Stroke**	**Adjust Storke**	**Magnet Code**	**Fixed Type**
Blank:Square Type T:Tie-rod Type M:Mickey Mouse Type	DNC:ISO6431 Standard Double Action Type DNCD:ISO6431 Standard Two Axis Double Action Type DNCJ:ISO6431 Two Axis Stroke Adjust Type	32mm-125mm		25:25mm 50:50mm 75:75mm	Blank:Without Magnet S:With Magnet	Blank:Normal type LB:Front and back fixed type FA:Front cover fixed type(Front flange type) FB:Back cover fixed type(Back flange type) CA:Back cover fixed type (Single earring) CB:Back cover fixed type(Double earring) SDB:Back cover fixed type

Internal structure

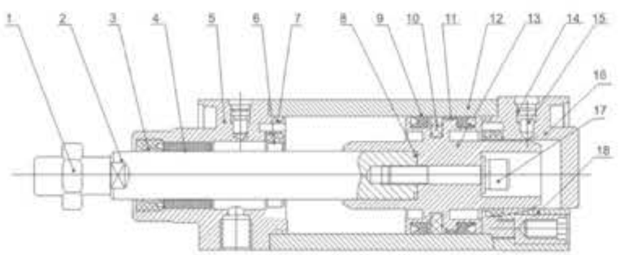

NO	Designation	NO	Designation
1	Piston Rod Nut	2	Piston Rod
3	Front Cover Seal Ring	4	Bearing
5	Front Cover	6	Buffering O-Ring
7	O-Ring	8	Piston rod O-Ring
9	Piston O-Ring	10	Magnet(Optional)
11	Wear Ring	12	Barrel
13	Piston	14	Cushion Seal
15	Cushion Needle	16	Back Cover
17	Hex Socket Screw	18	Profile Bolt

Specifcation

Bore(mm)	32	40	50	63	80	100	125
Motion Pattern	Double Action						
Working Medium	Filtered Air						
Compression Pressure	1.5MPa						
Max.Operating Pressure	1.0MPa						
Min.Operating Pressure	0.1MPa						
Buffer	Air Buffer(Standard)						
ConditionTemperature	-5~70℃						
Operating Speed	50~800mm/s						
Port Size	G1/8"	G1/4"		G3/8"		G1/2"	

Stroke

Bore	Standard Stroke	Buffer Stroke	Stroke Range
32	25 40 50 80 100 125 160 200 250 320 400 500	20	10~2000
40			
50		22	
63			
80		32	
100			
125		35	

DNC Series ISO6431 Standard Cylinder

Overall Dimensions

Normal Type
DNC–S

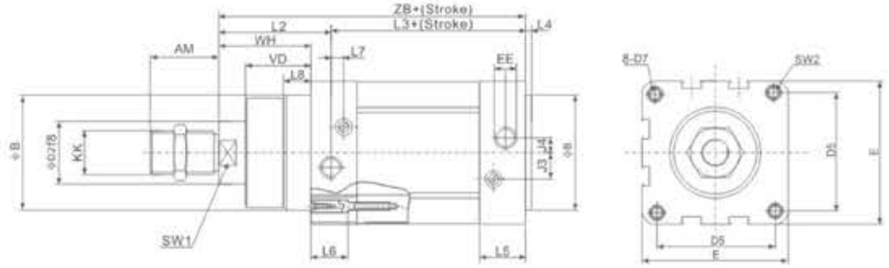

Dimension Sheet

Bore	AM	B	D2	D5	D7	E	EE(G)	J3	J4	KK	L2	L3	L4	L5	L6	L7	L8	SW1	SW2	VD	WH	ZB
32	22	30	12	32.5	M6	45	1/8	6	5.2	M10×1.25	40	80	4	26	22	3.3	8	10	6	16	26	120
40	24	35	16	38	M6	54	1/4	8	6	M12×1.25	46	89	4	29.6	22	3.6	10	13	6	20	30	135
50	32	40	20	46.5	M8	64	1/4	10	8.5	M16×1.5	54	90	4	30	22	5.1	10	17	8	27	37	144
63	32	45	20	56.5	M8	75	3/8	12.4	10	M16×1.5	57	101	4	35.5	22	6.6	10	17	8	27	37	158
80	40	45	25	72	M10	93	3/8	12.5	8	M20×1.5	65	109	4	36	25	10.5	10	22	10	34.5	46	174
100	40	55	25	89	M10	110	1/2	11.8	10	M20×1.5	71	118	4	39	25	8	12.5	22	10	38	51	189
125	54	60	32	110	M12	134	1/2	13	8	M27×2	95	128	6	44.7	30	14	12.5	28	12	46	65	223

Overall Dimensions

Double Piston Rod Type
DNC–D–S

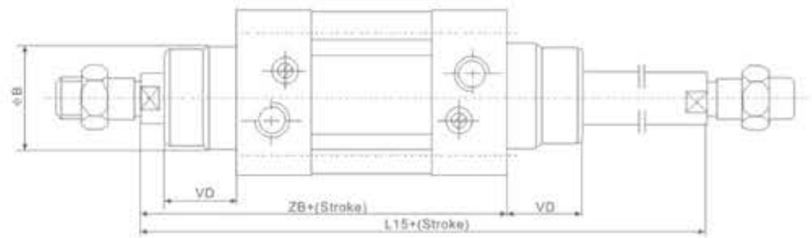

Dimension Sheet

Bore	32	40	50	63	80	100	125
B	30	35	40	45	45	55	60
L15	146	165	182	194	220	240	298
VD	16	20	27	27	34.7	38.2	46
ZB	120	135	144	158	174	189	223

DNCB Series Booster Cylinder

DNCB–50 × 25 × 50

Specifcation

Motion Pattern	Filtered Air
Compression Pressure	1.5MPa
Max.Operating Pressure	1.0MPa
Min.Operating Pressure	0.1MPa
ConditionTemperature	-5~70℃

Product instruction

Booster cylinder combine 2 or more ISO15552 standard cylinder with the same bore and stroke. Create twice or multiple force as standard cylinder. The connection of 2 or more cylinders are linked with the same material Compact structure and easy for installation.

DNC Series ISO15552 Standard Cylinder

DNG 200 × 100–S

DNG 250 × 200–S

Ordering Code

DNG — 160 × 100 — 25 — S — □

Series Code
DNG:ISO15552 Standard Double Action Type
DNGD:ISO15552 Standard Two Axis Double Action Type
DNGJ:ISO15552 Two Axis Stroke Adjust Type

Cylinder Bore
160mm-320mm

Stroke

Adjust Storke
25:25mm
50:50mm
75:75mm

Magnet Code
Blank:Without Magnet
S:With Magnet

Fixed Type
Blank:Normal type
LB:Front and back fixed type
FA:Front cover fixed type(Front flange type)
FB:Back cover fixed type(Back flange type)
CA:Back cover fixed type (Single earring)
CB:Back cover fixed type(Double earring)

Specifcation

Bore(mm)	160	200	250	320
Motion Pattern	Double Action			
Working Medium	Air			
Fixed Type	Normal type FA type FB type CA type CB type LB type TC type			
Working Pressure Range	0.1~1.0MPa			
Ensured Pressure Resistance	1.5MPa			
Operating Temperature Range	-5~60℃			
Operating Speed Range	50~500mm/s			
Buffer Type	Adjustable Buffer			
Port Size	G3/4"		G1"	
Lubrication	Not required (Use Turbine oilISO Vg32 when necessary)			

Overall Dimensions

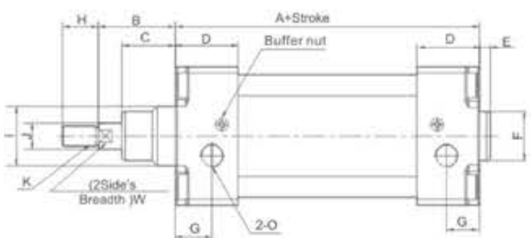

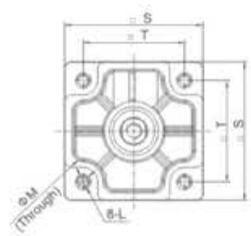

Dimension Sheet

Bore/Symbol	A	B	C	D	E	F	G	H	I	J	K	L	M	S	T	O
160	180	80	60	50	6	Φ65	25	72	Φ65	40	M36×2	M16	Φ25Φ30	180	140	G3/4"
200	180	95	70	50	6	Φ75	25	72	Φ75	40	M36×2	M16	Φ25Φ30	220	175	G3/4"
250	200	105	67	52	10	90	31	84	90	50	M42×2	M20	Φ30	270	220	G1"
320	218	120	82	52	10	110	31	96	110	63	M48×2	M24	Φ34	340	270	G1"

SI Series ISO6431 Standard Cylinder

SI 50 × 100

SIJ 50 × 100–25

Ordering Code

SI — 50 × 50 — 25 — S — □

Series Code
SI:ISO6431 Standard Double Action Type
SID:ISO6431 Standard Two Axis Double Action Type
SIJ:ISO6431 Two Axis Stroke Adjust Type

Cylinder Bore
32mm-200mm

Stroke

Adjust Storke
25:25mm
50:50mm
75:75mm

Magnet Code
Blank:Without Magnet
S:With Magnet

Fixed Type
Blank:Normal type
LB:Front and back fixed type
FA:Front cover fixed type(Front Flange Type)
FB:Back cover fixed type(Back Flange Type)
CA:Back cover fixed type (Single Earring)
CB:Back cover fixed type(Double Earring)
TC:Central trunnion type
TC-M:Central trunnion type attaching foot seat

Internal structure

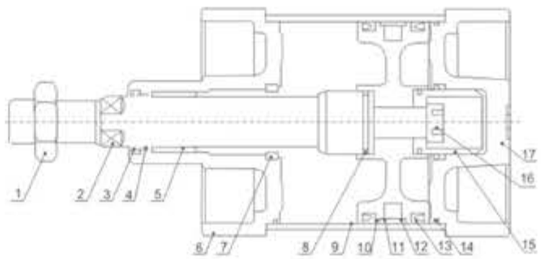

NO	Designation	NO	Designation
1	Piston Rod Nut	10	Piston
2	Piston rod	11	Wearing
3	Front cover seal ring	12	Magnet(Optional)
4	O-Ring	13	Pistion O-Ring
5	Bearing	14	Pipe wall O-Ring
6	Front cover	15	Damping
7	Buffering O-Ring	16	Hex socket screw
8	Piston rod O-Ring	17	Back cover
9	Barrel		

Specifcation

Bore(mm)	32	40	50	63	80	100	125	160	200
Motion Pattern	Double Action								
Working Medium	Air								
Fixed Type	Normal type FA type FB type CA type CB type LB type TC type								
Working Pressure Range	0.1~0.9MPa								
Ensured Pressure Resistance	1.35MPa								
Operating Temperature Range	-5~70℃								
Operating Speed Range	50~800mm/s								
Buffer Type	Adjustable Buffer								
Buffer Stroke	24						32		
Port Size	G1/8"	G1/4"		G3/8"		G1/2"		G3/4"	

MA6432 Series Stainless Steel Mini Cylinder(ISO6432)

MA6432 10 × 50

MA6432 25 × 50

Ordering Code

MA6432 □ **20** × **50** — **25** **S** — □

Serise Code
MA:Double Action Type
MSA:Single-Extrusion Type
MTA:Single Drawing-in Type
MAD:Double-shaft Double Action Type
MACD:Double-shaft Double Action Damping Type
MAJ:Double-shaft and adjustable stroke type
MAC:With Cushion Type

Back Cover Type
Blank:Fishtail Type
CM:Rounded Type
U:Horizontal Type

Cylinder Bore
8mm-25mm

Stroke

Adjustable Stroke Type
0~100mm

Magnet Code
Blank:Without Magnet
S:With Magnet

Fixed Type
Blank:Normal type
LB:Front and back fixed type
FA:Front cover fixed type
SDB:Back cover swinging type
U:Back cover fixed type

Internal structure

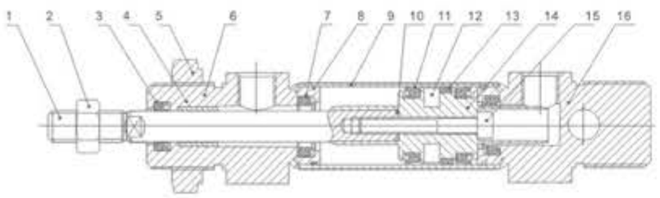

NO	Designation	NO	Designation
1	Piston Rod	9	Barrel
2	Piston Rod Nut	10	Piston rod O-ring
3	Front Cover Seal	11	Piston O-ring
4	Bearing	12	Magnet(Optional)
5	Hexagon Screw	13	Wear Ring
6	Front Cover	14	Piston
7	Cushion Ring	15	Hex Socket Screw
8	O-ring	16	Back Cover

Specifcation

Cylinder diameter	8	10	12	16	20	25
Fluid	Air					
Motion pattern	Double Action or single Action					
Ensured Pressure Resistance	15.3kgf/cm²(1.5Mpa)					
Max.pressure	10.2kgf/cm²(1.0Mpa)					
Min.pressure	0.5kgf/cm²(0.05Mpa) 1kgf/cm²(0.1Mpa)					
Environment and fluid temp	-10~+80℃(Internal Magnetic Install by Tach strap:Type Max.60℃)					
Piston veocity	Rubber Buffer(Standard),Air Buffer(Option)					
Buffering	50~750mm/s					
Kinetic energy Tolerance(kgf/cm)	0.2	0.3	0.4	0.9	2.7	4
Port Size	M5×0.8				G1/8"	

Stroke

Bore(mm)	Standard stroke	Max.Stroke(mm)
8	10,25,40,50,80,100,125,160,200	400
10	10,25,40,50,80,100,125,160,200	400
12	10,25,40,50,80,100,125,160,200	400
16	10,25,40,50,80,100,125,160,200	400
20	25,40,50,80,100,125,150,160,175,200,250,300	1000
25	25,40,50,80,100,125,150,160,175,200,250,300	1000

MA6432 Series Stainless Steel Mini Cylinder(ISO 6432)

Overall Dimensions

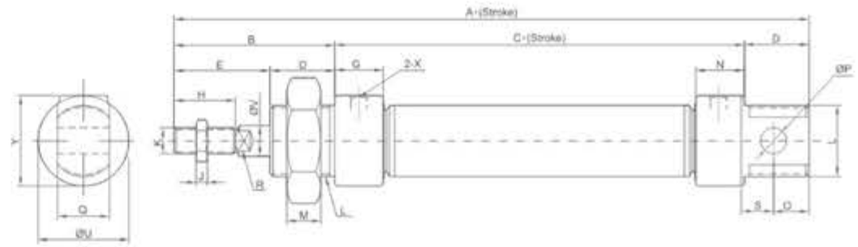

Dimension Sheet

Bore/Symbol	A	B	C	D	E	G	H	M	J	O	K	N	P	S	R	U	V	Q	Y	L	X
8	86	28	46	12	16	9	12	7	3	10	M4×0.7	9	4	6	-	15	4	8	15	M12×1.25	M5
10	86	27	47	12	15	9	12	7	3	10	M4×0.7	9	4	6	-	15	4	8	15	M12×1.25	M5
12	105	37	51	17	20	9	16	6	4.5	14	M6×1	9	6	9	5	20	6	12	20	M16×1.5	M5
16	111	38	56	17	21	12.5	16	6	4.5	13	M6×1	10.5	6	9	5	20	6	12	20	M16×1.5	M5
20	128	45	63	20	25	15	20	8	6	11	M8×1.25	15	8	12	6	27	8	16	27	M22×1.5	G1/8"
25	137	50	65	22	28	15	22	8	6	11	M10×1.25	15	8	12	8	27	10	16	27	M22×1.5	G1/8"

MA6432-N Series Stainless Steel Mini Cylinder (ISO 6432)

MA6432-N25 × 150

Overall Dimensions

Non Magnet Inside Magnet Rubber Buffer

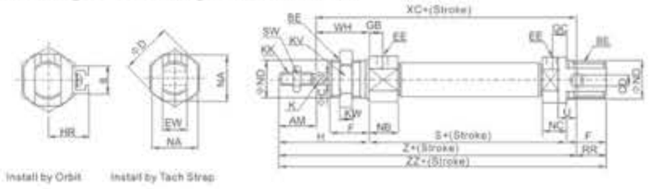

Dimension Sheet

Bore	AM	BE	ΦC	ΦCD	ΦD	EE	EW	F
Φ8	12	M12×1.25	4	4	17	M5×0.8	8	12
Φ10	12	M16×1.25	4	4	17	M5×0.8	8	12
Φ12	16	M16×1.5	6	6	20	M5×0.8	12	17
Φ16	16	M16×1.5	6	6	20	M5×0.8	12	17
Φ20	20	M22×1.5	8	8	28	G1/8"	16	20
Φ25	22	M22×1.5	10	8	33.5	G1/8"	16	22

Non Magnet Inside Magnet Rubber Buffer

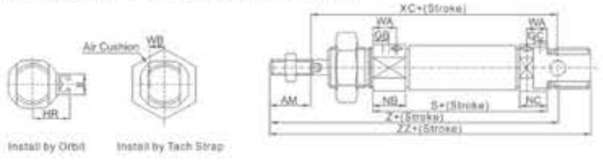

Bore	GB	GC	WA	WB	H	HR	K	KK	KV	KW	NB	NC	NA	ΦND	RR	S	SW	U	WH	XC	Z	ZZ
Φ8	7	5	-	-	28	10	-	M4×0.7	19	6	11.5	9.5	15	12	10	46	7	6	16	64	76	86
Φ10	7(5.5)	7(5.5)	10.5	4.5	28	10.5	-	M4×0.7	19	6	11.5(13.5)	9.5(13.5)	15	12	10	46(53)	7	6	16	64(71)	76(83)	86(93)
Φ12	8(5.5)	6(5.5)	9.5	5.5	38	14	5	M6×4	24	8	12.5(12.5)	10.5(12.5)	18	16	14	50(54)	10	9	22	75(79)	91(95)	105(109)
Φ16	8(5.5)	6(5.5)	9.5	5.5	38	14	5	M6×0.8	24	8	12.5	10.5(12.5)	18	16	13	56	10	9	22	82	98	111
Φ20	8	8	17	8.5	44	17	6	M8×1.25	32	11	15	15	24	22	11	62	13	12	24	95	95	126
Φ25	8	8	20	10	50	20	8	M10×1.25	32	11	15	15	30	22	11	65	17	12	28	104	126	137

■ Our company can also provide SMC Type ISO6432 standard stainless steel mini cylinder, if you need this, pls add -N after normal ordering code.

ADVU Series Compact Cylinder(ISO6431)

ADVU 40 × 50–S

Ordering Code

ADVU — 50 × 80 — S — B

Serise Code
ADVU:Double Action Type
AEVUZ:Single-Action type
ADVUD:Double-shaft Double Action Type

Cylinder Bore
16mm-100mm

Stroke
Normal Type:
16-25:1-200mm
32-63:1-300mm
80-100:1-400mm
Single Action:
16-100:1-25mm

Magnet Code
Blank:Without Magnet
S:With Magnet

Cog Type
Blank:Inner Thread
B:Outer Thread

Specifcation

Bore(mm)		16	20	25	32	40	50	63	80	100
Action		Double Acting, single rod/double rod								
Working Medium		Air								
Ensured Pressure Resistance		1.5MPa								
Operating pressure range	ADVU - -P-A	0.12~1.0MPa	0.1~1.0MPa		0.08~1.0MPa			0.06~1.0MPa		
	ADVU - -P-A-S2	0.13~1.0MPa	0.12~1.0MPa		0.1~1.0MPa			0.8~1.0MPa		
Ambient and fluid temperature		-20~80 (No freezing)								
Port size		M5			G1/8"					G1/4"
Piston rod thread	Female thread	M4	M5		M6		M8		M10	M12
	Male thread	M8	M10×1.25				M12×1.25		M16×1.5	M20×1.5
Cushion		Rubber bumper								

Overall Dimensions

ADVU□-□-P-A /Series

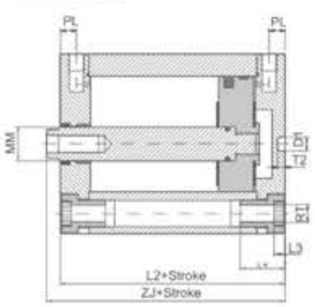

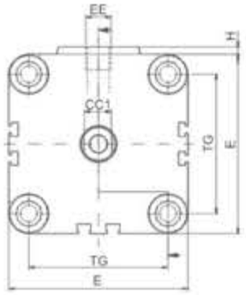

■ Note
To attach cylinder, 12 and 16mm from above, use only 2 screwsdiagonally or non-magnetic screws.
+= plus stroke length
2 Minimum screw-in depth

Dimension Sheet

Bore size(mm)	D1	E	EE	H	L2	L3	L4	MM	PL	RT	T2	TG	ZJ	CC1
16	6	29	M5	1	38	4	18.5	8	8	M4	4	18	44	6
20	6	36	M5	1.5	38	4	18.5	10	8	M5	4	22	43.5	8
25	6	40	M5	1.5	39.5	4	18.5	10	8	M5	4	26	46	8
32	6	50	G1/8	2	44.5	5	22	12	8	M6	4	32	51.5	10
40	6	60	G1/8	2.5	45.5	5	22	12	8	M6	4	42	52	10
50	6	68	G1/8	2.8	46.5	5	22	16	8	M8	4	50	54.5	14
63	8	88	G1/8	4	50	6	26	16	8	M10	4	62	56	14
80	8	107	G1/8	4	56	6	26	20	8.5	M10	4	82	62	17
100	8	128	G1/4	5	66.5	8	26	20	10.5	M10	4	103	76.5	22

■ Note:ADVU Series Cylinder With 100mm Bore Is Being Developed, Not Available At The Moment.

SDA Series Thin Type(Compact) Cylinder

SDA 32 × 25

SDAJ 32 × 25–10

Ordering Code

SDA — 20 × 30 — 5 — S — B

Serise Code
SDA: Double Action Type
SSA: Single Action Extrusion Type
STA: Single Action Drawing-in Type
SDAD: Double-shalf Double Action Type
SDAJ:Double-shalf and Adjustable Stroke Type

Cylinder Bore
12mm~100mm

Stroke

Adjust Stroke
5mm
15mm
25mm

Magnet Code
Blank:Without Magnet
S:With Magnet

Cog Type
Blank:Inner Thread
B:Outer Thread
N:No Thread

Internal structure

SDA Type

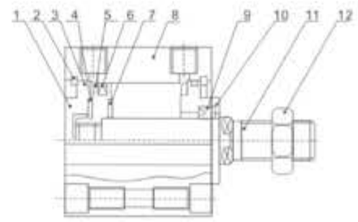

NO	Designation	NO	Designation
1	Back cover	2	Type C buckle ring
3	O-ring	4	Anti-crash cushion
5	Piston	6	Piston O-ring
7	Anti-crash cushion	8	Barrel
9	Front cover seal ring	10	Front cover
11	Piston rod	12	Piston Rod Nut

SSA Type

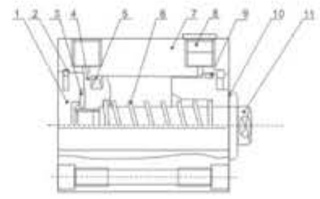

NO	Designation	NO	Designation
1	Back cover	2	Type C buckle ring
3	Anti-crash cushion	4	Piston
5	Piston O-ring	6	Compressed spring
7	Barrel	8	Silencer
9	Cover O-ring	10	Front cover
11	Piston rod		

STA Type

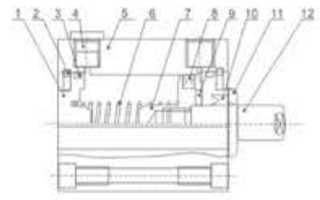

NO	Designation	NO	Designation
1	Back cover	2	Type C buckle ring
3	Cover O-ring	4	Silencer
5	Barrel	6	Compressed spring
7	Piston	8	Piston O-ring
9	Anti-crash cushion	10	Frount cover sealring
11	Front cover	12	Piston rod

TN Series Double-Shaft Cylinder

TN 20 × 25

Ordering Code

TN	20	×	50	—	S
Series Code	Cylinder Bore		Stroke		Magnet Code

Series Code
Double-Shaft
Double Action Type

Cylinder Bore
10mm
16mm
20mm
25mm
32mm

Stroke

Magnet Code
Blank:Without Magnet
S:Attach Magnet

Specifcation

Bore(mm)	10	16	20	25	32
Motion Pattern	Double action				
Working Medium	Air				
Operating Pressure Range	1~9kgf/cm²				
Ensured Pressure Resistance	10.5kgf/cm²				
Operating Temperature Range	-5~+70℃				
Operating Speed Range	100~500mm/s				
Adjustable Stroke	-10~0mm				
Cushion Type	Adjustable Cushion				
Non-rotating Precision	0.4℃		0.3℃		
Port Size	M5×0.8				G1/8"

Overall Dimensions

ϕ10

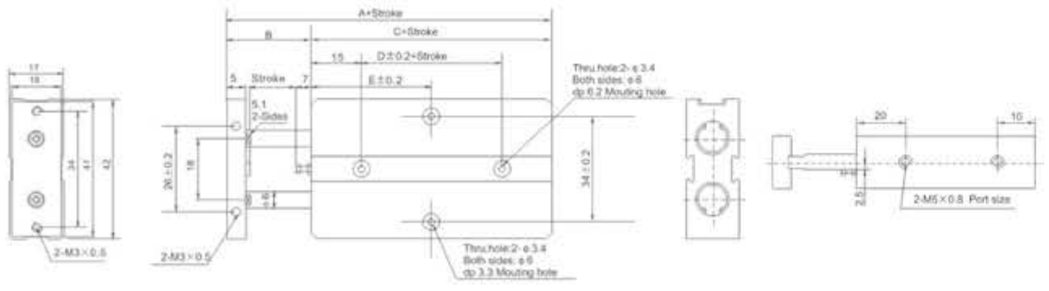

Dimension Sheet

Bore size / Item	A	B	C	D	E						
					10	20	30	40	50	60	70
10	63	12	51	10	30	30	35	40	45	50	55

TN Series Double-Shaft Cylinder

Overall Dimensions

ϕ16~ϕ25

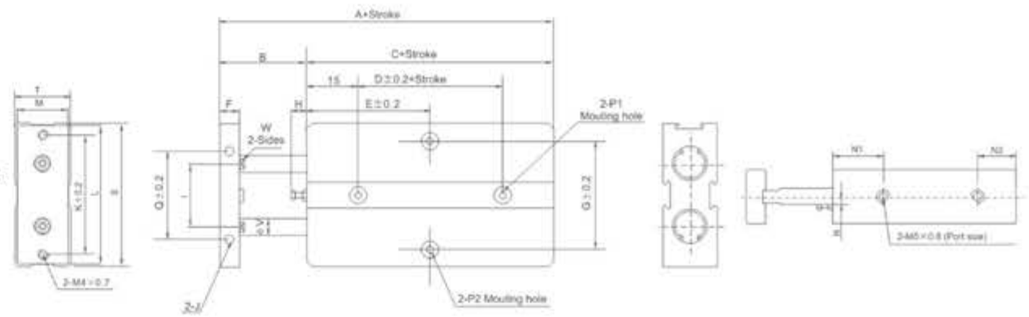

Dimension Sheet

Bore size / Item	A	B	C	D	E												F	G	H	I
					10	20	30	40	50	60	70	80	90	100	125	150				
16	68	15	53	20	30	35	40	45	50	55	60	65	70	75	87.5	100	8	47	6	24
20	78	20	58	20	35	35	40	45	50	55	60	65	70	75	87.5	100	10	55	9	28
25	81	19	62	30	40	40	45	50	55	60	65	70	75	80	92.5	105	10	66	8	34

Bore size/Item	J	K	L	M	N1	N2	P1	P2	Q	R	S	T	V	W
16	M4×0.7/dp 5	47	53	20	22	11	Both sides : ϕ7.5(dp) 7.2mm Thru.hole: ϕ4.5	Both sides: ϕ8(dp) 4.4mm Thru.hole: ϕ4.5	34	3	54	21	8	6.1
20	M4×0.7/dp 5	55	61	24	25	12	Both sides: ϕ7.5(dp) 7.2mm Thru.hole: ϕ4.5	Both sides: ϕ8(dp) 4.4mm Thru.hole: ϕ4.5	44	3.5	62	25	10	8.1
25	M4×0.7/dp 6	66	72	29	27	12	Both sides: ϕ7.5(dp) 7.2mm Thru.hole: ϕ4.5	Both sides: ϕ8(dp) 4.4mm Thru.hole: ϕ4.5	56	7	73	30	12	10.2

Overall Dimensions

ϕ32

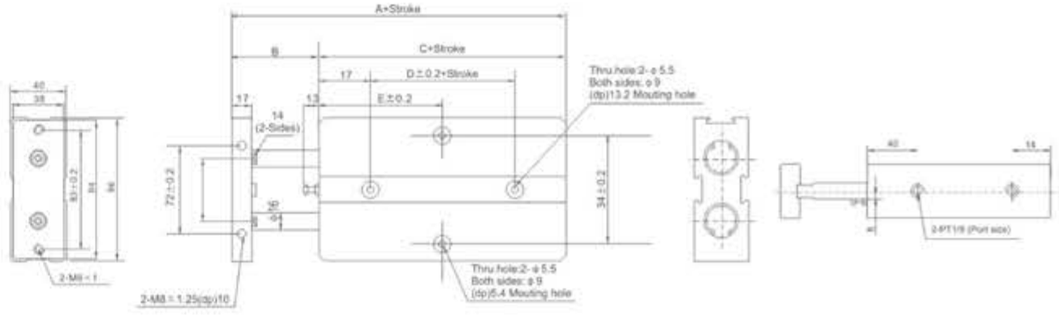

Dimension Sheet

Bore size / Item	A	B	C	D	E											
					10	20	30	40	50	60	70	80	90	100	125	150
32	108	30	78	35	45	50	55	60	65	70	75	80	85	90	102.5	115

ISO Standard Cylinder Accessories

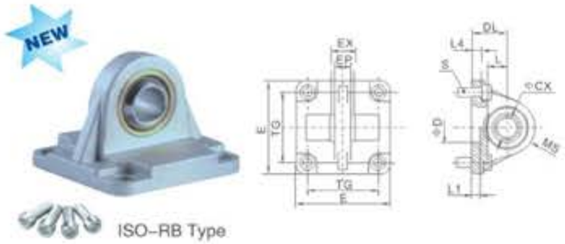

ISO-RB Type

Symbol/Bore	32	40	50	63	80	100
TG	32.5	38	46.5	56.5	72	89
⌀CX	10	12	16	16	20	20
DL	22	25	27	32	36	41
L	12	15	15	20	20	25
EX	14	16	21	21	25	25
EP	10.5	12	15	15	18	18
S	M6×20	M6×20	M8×20	M8×20	M10×25	M10×25
L4	5.5	5.5	6.5	6.5	10	10
D	30	35	40	45	45	55
L1	7	7	7	7	9	9
E	45	52	65	75	95	115
MS	16	18	21	23	28	30

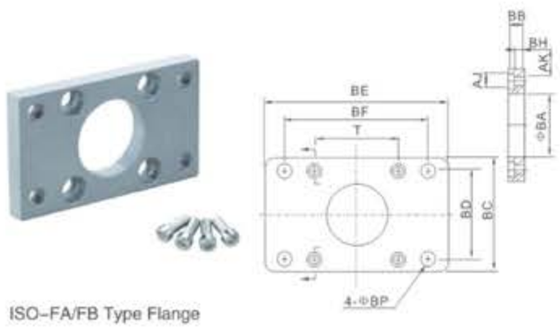

ISO-FA/FB Type Flange

Symbol/Bore	32	40	50	63	80	100	125	160	200
AJ	11	11	14	14	17	17	19	25	25
AK	7	7	9	9	11	11	13	17	17
BA	30.5	35.5	40.5	45.5	45.5	55.5	60.5	65.5	75.5
BB	10	10	12	12	16	16	20	20	25
BC	47	53	65	75	95	115	140	180	220
BD	32	36	45	50	63	75	90	115	135
BE	80	90	110	125	154	186	224	280	320
BF	64	72	90	100	126	150	180	230	270
BH	4	4	4	6	6	6	8	8	12
BP	7	9	9	9	12.5	14.5	16.5	18.5	24
T	32.5	38	46.5	56.5	72	89	110	140	175

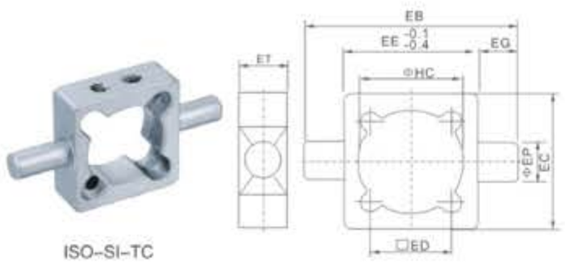

ISO-SI-TC

Symbol/Bore	32	40	50	63	80	100
EB	100	113	125	140	160	182
EC	53	63	75	90	105	128
ED	32.5	38	46.5	56.5	72	89
EE	52	63	75	90	110	128
EG	25	25	25	25	25	25
EP	12	16	16	20	20	25
ET	20	22	22	28	28	34
HC	37	45	55	68	87	107.5

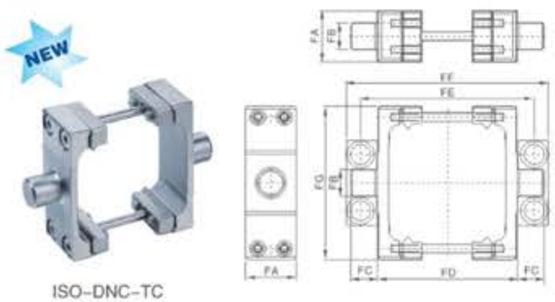

ISO-DNC-TC

Symbol/Bore	32	40	50	63	80	100	125
FA	30	32	34	41	44	48	50
FB	12	16	16	20	20	25	25
FC	12	16	16	20	20	25	25
FD	50	63	75	90	110	132	160
FE	71	87	99	116	136	164	192
FF	86	105	117	136	156	189	217
FG	65	75	95	105	130	145	175

ISO Standard Cylinder Accessories

ISO-Y Joint

ISO-Y+Pin ISO-Y+Clip

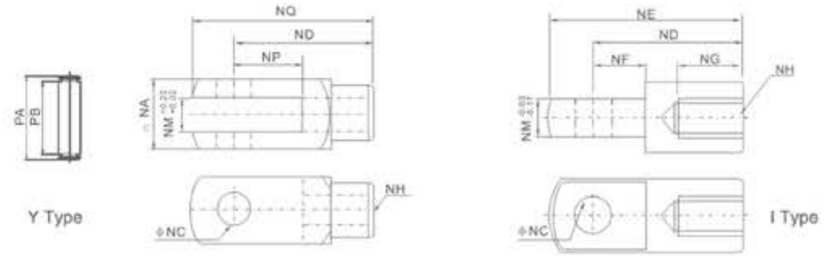

ISO-I Joint

Symbol/Bore	32	40	50	63	80	100	125	160	200
NA	19	25.4	32	32	44.4	44.4	55	70	70
NC	10	12	16	16	20	20	30	35	35
ND	40	48	64	64	80	80	110	144	144
NE	52	67	89	89	112	112	155	201	201
NF	15	24	32	32	40	40	50	50	55
NG	20	20	23	23	30	30	56	72	72
NH	M10×1.25	M12×1.25	M16×1.5	M16×1.5	M20×1.5	M20×1.5	M27×2.0	M36×2.0	M36×2.0
NM	10	12	16	16	20	20	30	35	35
NP	20	24	32	32	40	40	54	72	72
NQ	52	62	83	83	105	105	148	191	191
PA	26.2	32.8	39.3	39.3	53.3	53.3	64	80	80
PB	20	26.5	33	33	45	45	55.6	70.6	70.6

ISO-UJ Type Float Joint

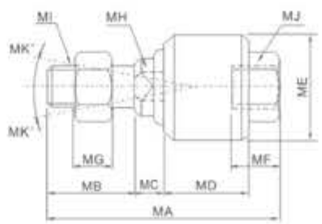

Symbol /Bore	MA	MB	MC	MD	ME	MF	MG	MH	MI	MK
32	58	22	7	21	26	11.5	7	10	M10×1.25	12
40	58	22	8	21	28	11.5	8	12	M12×1.25	12
50	90	27	10	41	44.5	20	10	17	M16×1.5	7
63	90	27	10	41	44.5	20	10	17	M16×1.5	7
80	102	29	13	46	53	24	13	22	M20×1.5	10
100	102	29	13	46	53	24	13	22	M20×1.5	10
125	147	54	13	64	62	39	14	30	M27×2.0	9
160	147	43	23	58	88	35	13.5	36	M36×2.0	15
200	147	43	23	58	88	35	13.5	36	M36×2.0	15

ISO-PHS Type Fish Eye Joint

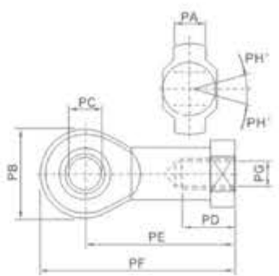

Symbol/Bore	PA	PB	PC	PD	PE	PF	PG	PH
32	11	26	10	21	43	56	M10×1.25	13
40	12	30	12	24	50	65	M12×1.25	13
50	15	38	16	33	64	83	M16×1.5	15
63	15	38	16	33	64	83	M16×1.5	15
80	18	46	20	40	77	100	M20×1.5	15
100	18	46	20	40	77	100	M20×1.5	15
125	37	70	30	51	110	145	M27×2.0	15
160	43	80	35	56	125	165	M36×2.0	16
200	43	80	35	56	125	165	M36×2.0	16

Standard Cylinder Accessories

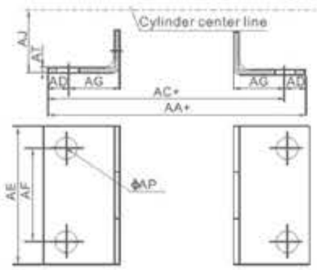

LB Type Foot Bracket

Symbol/Bore	32	40	50	63	80	100	125	160	200
AA	153	169	173	184	199	210	249	328	380
AC	134	140	149	158	167	174	213	288	320
AD	9.5	14.5	12	13	16	18	18	20	30
AE	50	57	68	80	97	112	140	180	220
AF	33	36	47	56	70	84	90	115	135
AG	20.5	23.5	28	31	30	30	45	60	70
AJ	28	30	36.5	41	49	57	90	115	135
AP	9	12	12	12	14	14	16	18	24
AT	3	3	3	3	4	4	8	8	10

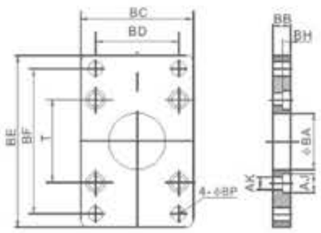

FA/FB Type Flange

Symbol/Bore	32	40	50	63	80	100	125	160	200
BA	28.3	32.3	38.3	38.3	47.3	47.3	56	63	81
BB	10	10	10	12	16	16	16	20	25
BC	47	52	65	76	95	115	140	180	220
BD	33	36	47	56	70	84	90	115	135
BE	72	84	104	116	143	162	224	280	320
BF	58	70	86	98	119	138	180	230	270
BH	6.5	6.5	6.5	8.5	10.5	10.5	10.5	12.5	16.5
AJ	10.5	10.5	13.5	13.5	5	5	19	25	25
AK	6.5	6.5	6.5	8.5	10.5	10.5	12.5	16.5	16.5
BP	7	7	9	9	11	11	16	18	22
T	33	37	47	56	70	84	110	140	175

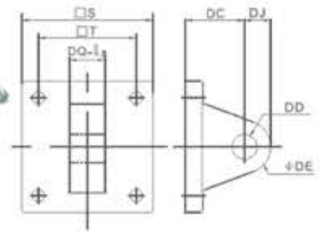

CA Type Single Earring

Symbol/Bore	32	40	50	63	80	100	125	160	200
S	48	50	62	75	94	112	140	180	220
T	33	37	47	56	70	84	110	140	175
DC	34	34	34	34	48	48	50	55	60
DD	14	14	14	14	20	20	25	30	30
DE	12	14	14	14	20	20	25	30	30
DJ	14	14	15	15	20	20	25	30	30
DQ	16	20	20	20	32	32	70	90	90

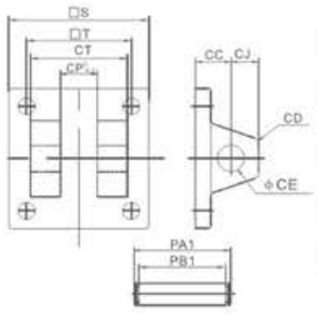

CB +Pin Type Double Earring

Symbol/Bore	32	40	50	63	80	100	125	160	200
CC	19	19	19	19	32	32	50	55	60
CD	5	5	3	2	8	8	25	30	30
CE	12	14	14	14	20	20	25	30	30
CJ	13	13	15	15	21	21	25	30	30
CP	16	20.5	20.3	20.3	32.3	32.3	70	90	90
CT	32	44	52	52	64	64	120	160	160
PAI	41	51.8	60.3	60.3	73.8	73.8	130	170	170
PBI	33.5	45.8	54	54	65.5	65.5	121.5	161.5	161.5
S	48	50	62	75	94	94	140	180	220
T	33	37	47	56	70	70	110	140	175

■ Note:CA and CB From 32-100,we can supply two kinds of materials products:1.Iron 2. Aluminum. When placing order, please indicate product material. From 125-200 are all iron.

Standard Cylinder Accessories

Y+Pin Type Joint

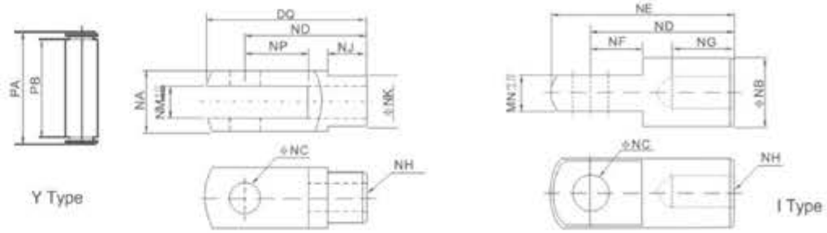

I Type Joint

Symbol/Bore	32	40	50	63	80	100	125	160	200
NA	19	25.4	32	32	44.4	44.4	64	80	80
NB	20	24	32	32	40	40	45	54	54
NC	10	12	16	16	20	20	20	30	30
ND	40	48	64	64	80	80	102	120	120
NE	52	67	89	89	112	112	121	130	130
NF	15	24	32	32	40	40	52	35	35
NG	20	20	23	23	30	30	56	50	50
NH	M10×1.25	M12×1.25	M16×1.5	M16×1.5	M20×1.5	M20×1.5	M27×2	M36×2	M36×2
NJ	12	20	22	22	30	30	27	40	40
NK	18	23	30	30	39	39	38	54	54
NM	10	12	16	16	20	20	32	40	40
MP	20	24	32	32	40	40	35	35	35
NQ	52	62	83	83	105	105	122	150	150
PA	25	32.8	39.3	39.3	53.3	53.3	74	91	91
PB	19.5	26.5	33	33	45	45	63.5	81	81

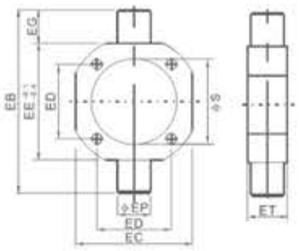

TC Type

Symbol/Bore	32	40	50	63	80	100	125	160	200
EB	88.5	113	126	138	164	182	210	264	320
EC	52	63	76	88	114	132	160	200	248
ED	33	37	47	56	70	84	110	140	175
EE	55	63	76	88	114	132	160	200	248
EG	16.75	25	25	25	25	25	25	32	36
EP	16	25	25	25	25	25	25	32	32
ET	30	30	30	30	30	35	35	41	49
S	37.5	45.5	56.5	68.5	87.5	107.5	134.5	172.5	219.5

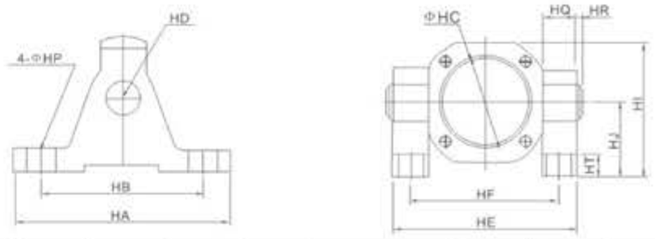

TC-M Type

Symbol/Bore	HA	HB	HC	HD	HE	HF	HI	HJ	HQ	HR	HT	HP
40	110	80	45.5	22	109	86	81.5	50	23	2	12	12
50	110	80	55.5	22	122	99	88	50	23	2	12	12
63	110	80	68.5	22	134	111	94	50	23	2	12	12
80	120	85	87.5	22	160	137	127	70	23	2	14	14
100	120	85	107.5	22	178	155	136	70	23	2	14	14

Mini Cylinder Accessories

M-FA Type Flange

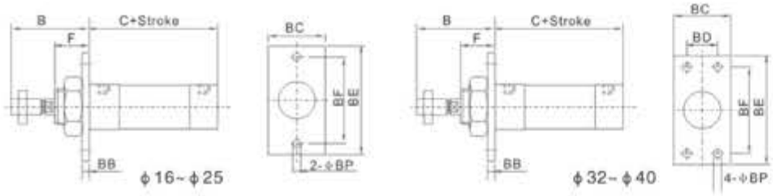

M-FA-A Type

Bore	B	C		C(MSA Series)		C(MSAL Series)		BB	BC	BD	BE	BF	BP	F
		MA Series	MAL Series	0-50	51-100	0-50	51-100							
16	38	60	-	60	85	-	-	3	26	-	52	40	5.5	16
20	40	76	70	76	101	70	95	4	33	-	64	50	6.5	12
25	44	76	70	76	101	70	95	4	33	-	64	50	6.5	14
32	44	76	70	76	101	70	95	4	47	33	72	58	6.5	14
40	46	76	92	76	101	92	117	4	50	36	84	70	6.5	14

■ Our company can also provide this used for mini cylinder flange from 16~25, if you need, pls add A after all ordering code, like M-FA-20-A

M-LB Type Foot Bracket

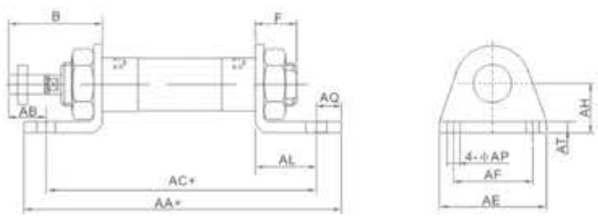

Symbol / Bore	B	F	AA (MA Series)	AA (MAL Series)	AA(MSA Series)		AA(MSAL Series)		AB	AC (MA Series)	AC (MAL Series)	AC(MSA Series)		AC(MSAL Series)		AE	AF	AL	AQ	AP	AT	AH
					0-50	51-100	0-50	51-100				0-50	51-100	0-50	51-100							
16	38	16	98	-	98	123	-	-	25	86	-	86	111	-	-	44	32	13	6	5.5	3	20
20	40	12	122	116	122	147	116	141	25	106	100	106	131	100	125	54	40	15	8	6.5	3	25
25	44	14	122	116	122	147	116	141	29	106	100	106	131	100	125	54	40	15	8	6.5	3	25
32	44	14	142	136	142	167	136	161	19	126	120	126	151	120	145	59	45	25	8	6.5	4	32
40	46	14	142	158	142	167	158	183	21	126	142	126	151	142	167	64	50	25	8	6.5	4.5	36

M-SDB Type Bracket

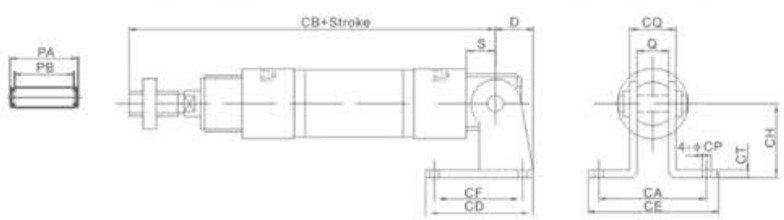

Symbol / Bore	D	S	Q	CA	CB(MA Series)	CB(MAL Series)	CB (MSA Series)		CB (MSAL Series)		CD	CE	CF	CH	CT	CP	CQ	PA	PB
							0-50	51-100	0-50	51-100									
16	16	9	12	-	107	-	107	132	-	-	23	-	12	20	3	5.5	16.5	21	17
20	21	12	16	51	128	122	128	153	122	147	48	67	32	32	3	6.5	22	27	22.5
25	21	12	16	51	132	126	132	157	126	151	48	67	32	32	3	6.5	22	27	22.5
32	27	15	16	51	135	129	135	160	129	154	52	67	36	36	3	6.5	24	30	24.5
40	27	15	20	55	137	153	137	162	153	178	56	71	40	40	3	6.5	28	34	28.5

Mini Cylinder Accessories

M-Y Joint

M-Y+Pin M-Y+Clip

M-I Joint

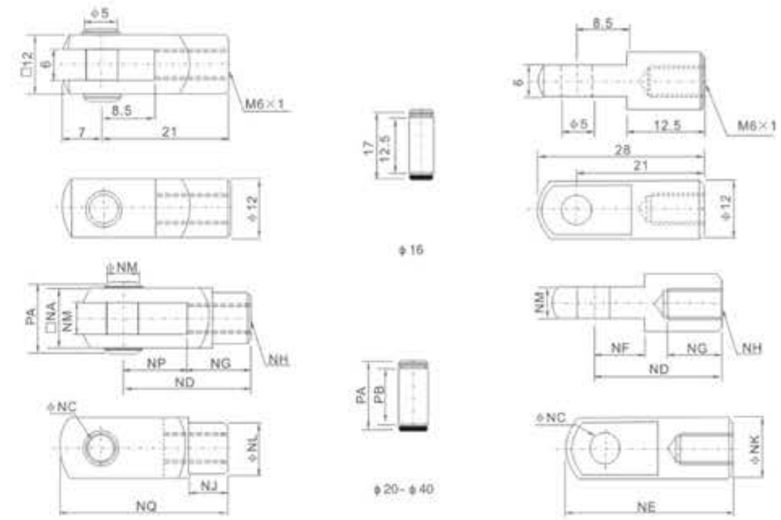

Symbol/Bore	NA	NC	ND	NE	NF	NG	NH	NJ	NK	NL	NM	NN	NP	NQ	PA	PB
20	16	8	30	40	11	15	M8×1.25	10	16	14	8	8	15	40	21	16.5
25	19	10	40	52	15	20	M10×1.25	12	20	18	10	10	20	52	25	19.5
32	19	10	40	52	15	20	M10×1.25	12	20	18	10	10	20	52	25	19.5
40	25.4	10	45	57	15	25	M12×1.25	15	24	23	14	10	20	57	31	26

M-UJ Type Float Joint

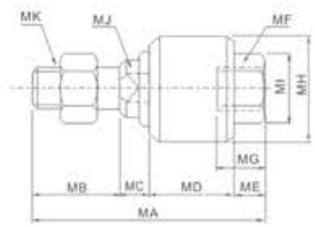

Symbol/ Bore	MA	MB	MC	MD	ME	MF	MG	MH	MI	MJ	MK
20	51	20	6	17	8	M8×1.25	12	24	13	8	M8×1.25
25	58	22	7	21	8	M10×1.25	12	26	17	10	M10×1.25
32	58	22	7	21	8	M10×1.25	12	26	17	10	M10×1.25
40	58	22	8	21	7	M12×1.25	12	28	19	12	M12×1.25

M-PHS Type Fish Eye Joint

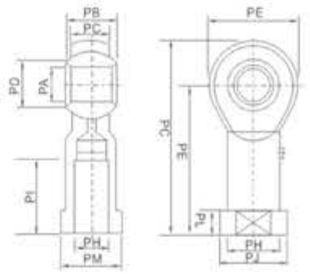

Symbol/ Bore	PA	PB	PC	PD	PE	PF	PG	PH	PI	PJ	PK	PL	PM
20	8	12	9	10.4	22	36	47	M8×1.25	17	16	12.5	5	14
25	10	14	11	12.9	26	43	56	M10×1.25	21	19	15	6.5	17
32	10	14	11	12.9	26	43	56	M10×1.25	21	19	15	6.5	17
40	12	16	12	15.4	30	50	65	M12×1.25	24	22	17.5	6.5	19

XC-11R Series Magnetism Switch

Features and Applications

1. Compact design
2. LED light
3. Anti-vibration application
4. For groove and bandage fixing type
5. Simple installation
6. Suitable for thin type(compact) cylinder

Specifcation

Type	XC-11R	XC-11RB	XC-11N	XC-11P
250 / 320 Connect Diagram	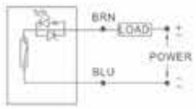		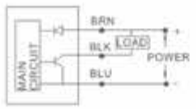	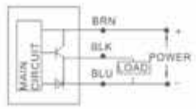
Parameter				
Switching logic	SPST Normally Open	SPST Normally Closed	Solid State Output,Normally Open	
Sensor type	Reed switch		NPN Input	PNP Output
Operating voltage	5-240V DC/AC	5-120V DC/AC	5-30V DC	
Max.switching current	100mA max.		200mA max.	
Contact rating	10W max.		6W max.	
Current consumption	None		20mA max@ 24V(Switch Active)	
Voltage drop	2.5V max.@100mA		0.5V max @ 200mA	
Leakage current	None		0.01mA max.	
Indicator	Red LED		Red LED	Green LED
Cabel	ϕ3.2,2C PVC Gray color,oil resistance PVC		ϕ3.2,3C PVC Black color,oil resistance PVC	
Sensitivity	40Gauss			
Max.switch frequency	200Hz		1000Hz	
Temperature range	-10~70℃			
Shock	30G		50G	
Vibration	9G			
Enclosure classification	IEC 529 IP67(NEMA 6)			
Protection circuit	None		With protection	

Overall Dimensions

XC-11R
XC-11R-QR

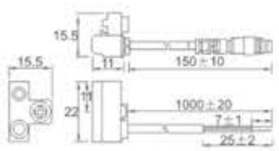

XC-11N
XC-11N-QD

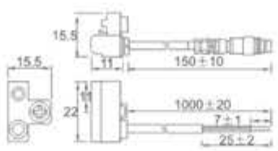

Joint Pipe Bore

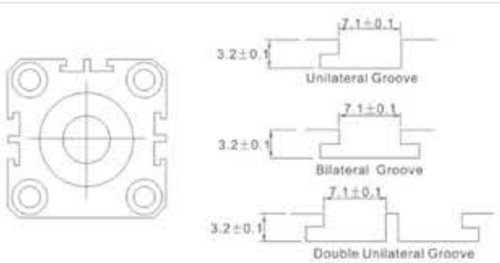

QD Pinout

2 wire QD wining

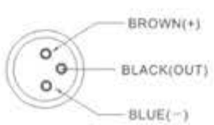

3 wire QD wining

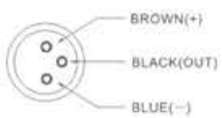

Magnetism Switch

Specifcation

Model	Product	Contact Type	Working Voltage	Diameter	Joint Pipe Bore
XC-01R Series		Amagnetic reed Switch contact	5~240V DC/AC	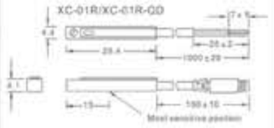	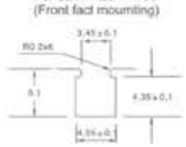
		Contactless NPN transistors	5~30V DC		
		Contactless PNP transistors			
XC-07R Series		Amagnetic reed Switch contact	5~240V DC/AC	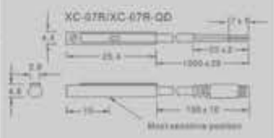	
		Contactless NPN transistors	5~30V DC		
		Contactless PNP transistors			
XC-15R Series		Amagnetic reed Switch contact	5~240V DC/AC	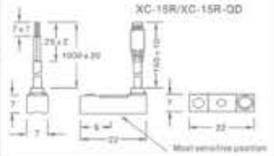	
		Contactless NPN transistors	5~30V DC		
		Contactless PNP transistors			
XC-20R Series		Amagnetic reed Switch contact	5~240V DC/AC	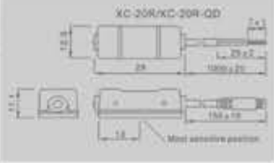	
		Contactless NPN transistors	5~30V DC		
		Contactless PNP transistors			
XC-36R Series		Amagnetic reed Switch contact	5~240V DC/AC	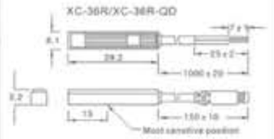	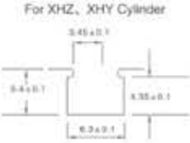
		Contactless NPN transistors	5~30V DC		
		Contactless PNP transistors			

XOU Series Air Source Treatment Unit

XOU–MINI

The XOU consisted of XOFR and XOL,each unit can be ordered separately.

The XOF with water separator cleans the compressed air of fluid oil,condensation and dirt. Particles.For special application,the standard 40μm filter element may easily be replaced by a 5μm filter element.

The XOR maintain imputting constant operating pressure despite fluctuation in line pressure and the amount of air consumed.The proportional lubricator adds a regulated quantity of oil to the filtered air.The oil-mist content proportional to the flow and oil can be added during operation. The oil drop rate is controlled by the adjustable bolt.Normally,1to 12 drops/1000L of the air is sufficient

Ordering Code

XO — U — MINI — 1/4 — □ — □ — □

- **Series**: XO Series
- **Function code**: FR.L Combination
- **Body**: MINI, MIDI, MAXI
- **Port Size**: G1/8" G1/2" G1/4" G3/4" G3/8" G1"
- **Grade of Filtration**: Blank:40μm, 5M:5μm
- **Manometer**: Blank:12bar, 7:7bar
- **Drain Type**: Blank: Turnd Manually, A:Auto Drain Type

Specifcation

Service units		MINI			MIDI			MAXI	
Manual Drain	Working pressure:12bar,40μm	XOU-1/8-MINI	XOU-1/4-MINI	XOU-3/8-MINI	XOU-3/8-MIDI	XOU-1/2-MIDI	XOU-3/4-MIDI	XOU-3/4-MAXI	XOU-1-MAXI
	Working pressure:7bar,40μm	XOU-1/8-7-MINI	XOU-1/4-D-7-MINI	XOU-3/8-7-MINI	XOU-3/8-7-MIDI	XOU-1/2-7-MIDI	XOU-3/4-7-MIDI	XOU-3/4-7-MAXI	XOU-1-7-MAXI
	Working pressure:12bar,5μm	XOU-1/8-5M-MINI	XOU-1/4-5M-MINI	XOU-3/6-5M-MINI	XOU-3/8-5M-MIDI	XOU-1/2-5M-MIDI	XOU-3/4-5M-MIDI	XOU-3/4-5M-MAXI	XOU-1-5M-MAXI
Manometer	0~12bar	OMA-40-16-1/8			OMA-50-16-1/4				
	0~7bar	OMA-40-10-1/8			OMA-50-10-1/4				
Medium		Compressed air							
Features of structure		Sintered filter with water separator;MINI/MIDI:MAXI:Piston regulator;Diaphragm type regulator;Direct constant-density lubricator							
Mounting type		Pipe mounting or foot mounting							
Assembly position		Vertical ±5°							
Connection		G1/8"	G1/4"	G3/8"	G3/8"	G1/2"	G3/4"	G3/4"	G1"
Standard nominal flow rate	XOU-...(-A)	700	1000	1200	2000	2600	2600	7000	8000
	XOU-...-7-(-A)	800	1300	1500	2500	2800	2800	8500	8700
	XOU-...-5M-(-A)	600	850	1050	1700	1800	2100	6500	7200
Primary pressure	Manualcondensate drain	1~16bar							
	Automatic condensate drain	1.5~12bar							
Working pressure		0.5~12bar/0.5~7bar							
Min.Standard nominal flow rate		3 L/min			6 L/min			10 L/min	
Grade of filtration		40μm/5μm							
Capacity of condensate fluid		22ml							
Temperature range		0~60℃							
Materials information		Housing:Zinc die-casting;Filter bowl and oil bowl:PC;Metal bowl guard:Aluminum alloy;Sealing:NBR;Adjusting knob:POM							

Internal structure

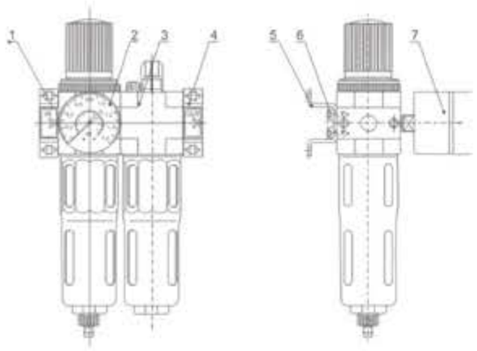

NO.	Item	Material
1	Flange-IN	Zinc alloy
2	Filter + Regulator	
3	Lubricator	
4	Flange - OUT	Zinc alloy
5	Bracket	SPCC
6	Allen screw	S35C
7	Pressure gauge	

XOU Series Air Source Treatment Unit

Overall Dimensions

Graphic Symbol

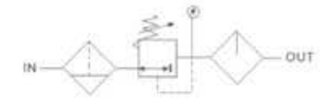

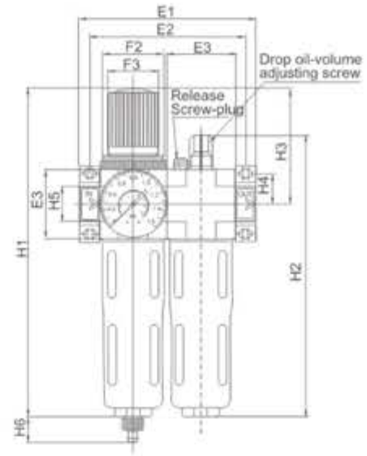

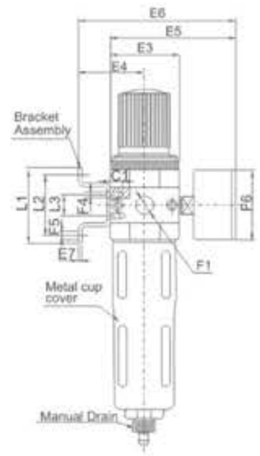

Dimension Sheet

Model	E1	E2	E3	E4	E5	E6	E7	F1	F2
XOU-...-MINI	104	92	40	39	76	95	2	G1/8",G1/4",G3/8"	M36×1.5
XOU-...-MIDI	140	125	55	47	93	112	3	G3/8",G1/2",G3/4"	M52×1.5
XOU-...-MAXI	162,182	146,157	66	53	104	124	3	G3/4",G1"	M52×1.5

Model	F3Φ	F4	F5Φ	F6Φ	L1	L2	L3	H1	H2	H3	H4	H5	H6
XOU-...-MINI	31	M4	4.5	41	44	35	11	194	169	69	17.5	20	15
XOU-...-MIDI	50	M5	5.5	52	71	60	22	250	206	97	24.5	32	15
XOU-...-MAXI	50	M5	5.5	53	71	60	22	272	226	80	24.5	32,40	15

Note: The Color Can Be Customized According to Your Requirement.

Flow diagram

Standard flow rate qn as a function of the output pressure p2

OU-1/4-MINI

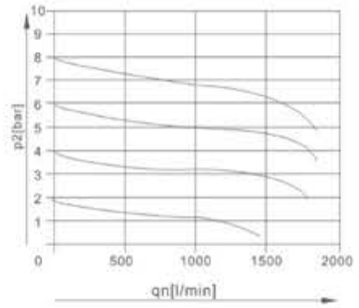

OU-1/2-MIDI

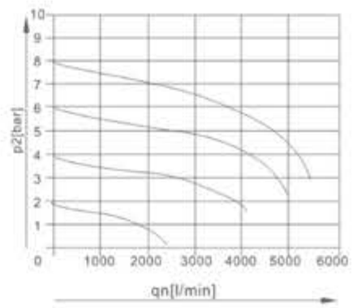

OU-1-MAXI

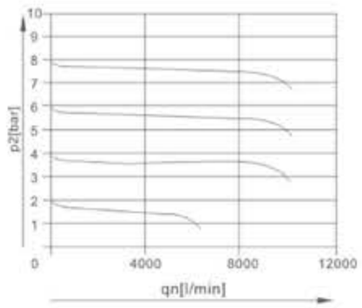

Primary pressure: p1=10 bar

XOFR Series Filter & Regulator

XOFR-MINI

Filter and pressure regulator combine a single unit, and cleans the compressed air of fluid oil,condensation and dirt particles.For special application,the standard 40μm filter element may easily be replaced by a 5μm filter element.

The XOR maintain im putting constant operating pressure despite fluctuation in line pressure and the amount of air consumed.

Ordering Code

XO	FR	—	MINI	—	1/4	—	□	—	□	—	□
Series XO Series	**Function code** Filter&Regulator		**Body** MINI MIDI MAXI		**Port Size** G1/8" G1/2" G1/4" G3/4" G3/8" G1"		**Grade of Filtration** Blank:40μm 5M:5μm		**Manometer** Blank:12bar 7:7bar		**Drain Type** Blank: Turnd Manually A: Auto Drain Type

Specifcation

Filter regulators		MINI			MIDI			MAXI	
Manual Drain	Working pressure:12bar,40μm	XOFR-1/8-MINI	XOFR-1/4-MINI	XOFR-3/8-MINI	XOFR-3/8-MIDI	XOFR-1/2-MIDI	XOFR-3/4-MIDI	XOFR-3/4-MAXI	XOFR-1-MAXI
	Working pressure:7bar,40μm	XOFR-1/8-7-MINI	XOFR-1/4-D-7-MINI	XOFR-3/8-7-MINI	XOFR-3/8-7-MIDI	XOFR-1/2-7-MIDI	XOFR-3/4-7-MIDI	XOFR-3/4-7-MAXI	XOFR-1-7-MAXI
	Working pressure:12bar,5μm	XOFR-1/8-5M-MINI	XOFR-1/4-5M-MINI	XOFR-3/8-5M-MINI	XOFR-3/8-5M-MIDI	XOFR-1/2-5M-MIDI	XOFR-3/4-5M-MIDI	XOFR-3/4-5M-MAXI	XOFR-1-5M-MAXI
Manometer	0~12bar	OMA-40-16-1/8			OMA-50-16-1/4				
	0~7bar	OMA-40-10-1/8			OMA-50-10-1/4				
Medium		Compressed air							
Features of structure		Sintered filter with water separator;MINI/MID:Diaphragm type-regulator;MAXI:Piston regulator;							
Mounting type		Pipe mounting or foot mounting							
Assembly position		Vertical ±5°							
Connection		G1/8"	G1/4"	G3/8"	G3/8"	G1/2"	G3/4"	G3/4"	G1"
Standard nominal flow rate	XOFR-...	750	1400	1600	3100	3400	3400	9000	10000
	XOFR-...-7	900	1500	1700	3400	3900	3900	9500	16000
	XOFR-...-5M	650	1200	1350	2400	2500	2500	7300	7600
Primary pressure	Manualcondensate drain	1~16bar							
	Automatic condensate drain	1.5~12bar							
Working pressure		0.5~12bar/0.5~7bar							
Grade of filtration		40μm/5μm							
Max.Condensate Capacity		22ml							
Temperature range		0~60℃							
Materials information		Housing:Zinc die-casting;Filter bowl:PC;Metal bowl guard:Aluminum alloy;Sealing:NBR;Adjusting knob:POM							

Overall Dimensions

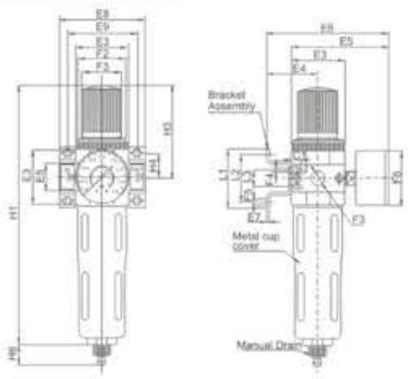

Graphic Symbol

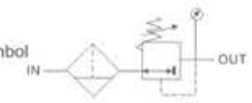

Dimension Sheet

Model	E3	E4	E5	E6	E8	E9	F1	F2
XOFR-...-MINI	40	39	76	95	64	52	G1/8",G1/4",G3/8"	M36×1.5
XOFR-...-MIDI	55	47	93	112	85	70	G3/8",G1/2",G3/4"	M52×1.5
XOFR-...-MAXI	66	53	104	124	116	91	G3/4",G1"	M52×1.5

Model	F3Φ	F4	F5Φ	F6Φ	L1	L2	L3	H1	H3	H4	H5	H6
XOFR-...-MINI	31	M4	4.5	41	44	35	11	194	69	17.5	20	15
XOFR-...-MIDI	50	M5	5.5	52	73	60	22	250	98	24.5	32	15
XOFR-...-MAXI	50	M5	5.5	53	73	60	22	272	80	24.5	32,40	15

XOFR Series Filter & Regulator

Internal structure

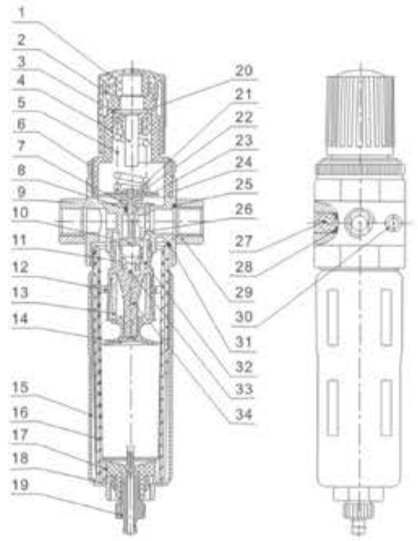

NO	Item	Material	NO	Item	Material
1	Pressure knob	POM	18	Inner joint	POM
2	Regulator cap	POM	19	Condensate drain	POM
3	Regulator nut	S35C	20	Wearing sheet	Insulation sheet
4	Adjusting spindle	S35C	21	OR Sheet	NBR
5	Pressure spring	SWC	22	Overflow base	6061-T6
6	Fixed ring	6061-T6	23	One part of diaphragm	SPCC
7	One part of membrane	PA6+G15	24	Diaphragm	NBR+Nylon Mesh
8	O-ring	NBR	25	O-ring	NBR
9	Flange-IN	Zinc alloy	26	OR Body	Zinc alloy
10	Spool	Brass	27	Plug	POM
11	O-ring	NBR	28	O-ring	NBR
12	Whirl wind impeller	POM	29	Flange-OUT	Zinc alloy
13	Filter element	PE	30	Allen screw	S35C
14	Manger	POM	31	O-ring	NBR
15	Metal bowl guard	Aluminum alloy	32	Spring	SWPB
16	Filter bowl	PC	33	Fasteners	Brass
17	O-ring	NBR	34	Filter element base	POM

Flow diagram

Standard flow rate qn as a function of the output pressure p2

OFR-1/4-MINI

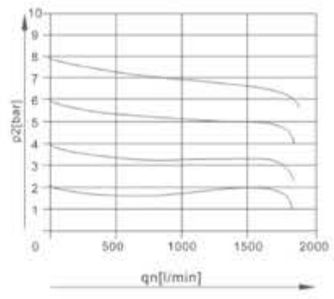

OFR-1/2-MIDI

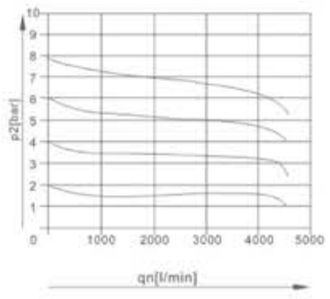

OFR-1-MAXI

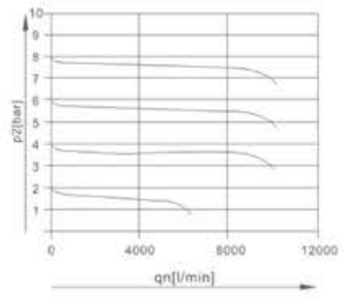

Primary pressure: p1=10 bar

XOR Series Regulator

XOR–MINI

The XOR maintain imputting constant operating pressure despite fluctuation in line pressure and the amount of air consumed.

Ordering Code

XO	R	—	MINI	—	1/4	—	□
Series XO Series	**Function code** Regulator		**Body** MINI MIDI MAXI		**Port Size** G1/8" G1/4" G3/8" G1/2" G3/4" G1"		**Manometer** Blank:12bar 7:7bar

Specifcation

Regulators		MINI			MIDI			MAXI	
Working pressure 12bar		XOR-1/8-MINI	XOR-1/4-MINI	XOR-3/8-MINI	XOR-3/8-MIDI	XOR-1/2-MIDI	XOR-3/4-MIDI	XOR-3/4-MAXI	XOR-1-MAXI
Working pressure 7bar		XOR-1/8-7-MINI	XOR-1/4-7-MINI	XOR-3/8-7-MINI	XOR-3/8-7-MIDI	OXR-1/2-7-MIDI	XOR-3/4-7-MIDI	XOR-3/4-7-MAXI	XOR-1-7-MAXI
Manometer	0~12bar	OMA-40-16-1/8			OMA-50-16-1/4				
	0~7bar	OMA-40-10-1/8			OMA-50-10-1/4				
Medium		Filttered,compressed air(lubricated or unlubricated)							
Features of structure		MINI/MIDI:Diaphragm type regulator;MAXI: Piston regulator							
Mounting type		Pipe/foot/Plate mounting							
Assembly position		Any							
Connection		G1/8"	G1/4"	G3/8"	G3/8"	G1/2"	G3/4"	G3/4"	G1"
Standard nominal flow rate	XOR-...	800	1500	1700	3200	3500	3500	11000	11500
	XOR-...-7-	1000	1600	1800	3300	4000	4500	12000	12500
Primary pressure		1~16bar							
Working pressure		0.5~12bar/0.5~7bar							
Temperature range		0~60℃							
Materials information		Housing:Zinc die-casting; Sealing:NBR; Adjusting knob:POM							

Overall Dimensions

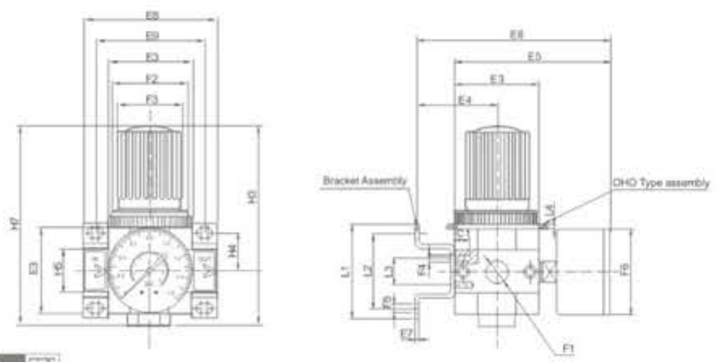

Graphic Symbol

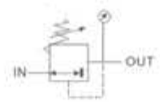

Dimension Sheet

Model	E3	E4	E5	E6	E8	E9	F1	F2	F3Φ	F4	F5Φ	F6Φ	L1	L2	L3	L4	H3	H4	H7
XOR-...-MINI	40	39	76	95	64	52	G1/8",G1/4",G3/8"	M36×1.5	31	M4	4.5	41	44	35	11	Max.3	69	17.5	96
XOR-...-MIDI	55	47	93	112	85	70	G3/8",G1/2",G3/4"	M52×1.5	50	M5	5.5	52	73	60	22	Max.5	98	24.5	96
XOR-...-MAXI	66	53	104	124	96,116	80,91	G3/4",G1"	M52×1.5	31	M5	5.5	53	73	60	22	Max.4	80	24.5	96

XOR Series Regulator

Internal structure

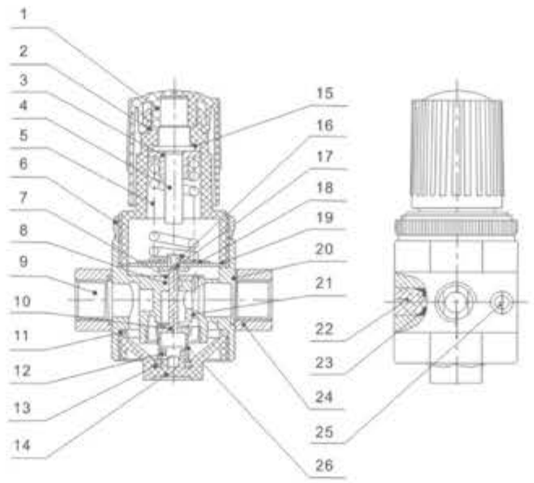

NO	Item	Material
1	Pressure knob	POM
2	Regulator cap	POM
3	Regulator nut	S35C
4	Adjusting spindle	S35C
5	Pressure spring	SWC
6	Fixed ring	6061-T6
7	One part of membrane	NBR
8	O-ring	NBR
9	Flange-IN	Zinc alloy
10	Spool	Brass
11	O-ring	NBR
12	O-ring	NBR
13	Fasteners	Brass
14	Locker cover	Zinc alloy
15	Wearing sheet	Insulation sheet
16	OR Sheet	NBR
17	Overflow base	6061-T6
18	One part of diaphragm	SPCC
19	Diaphragm	NBR+Nylon Mesh
20	O-ring	NBR
21	OR Body	Zinc alloy
22	Plug	POM
23	O-ring	NBR
24	Flange-OUT	Zinc alloy
25	Allen screw	S35C
26	Spring	SWPB

Flow diagram

Standard flow rate qn as a function of the output pressure p2

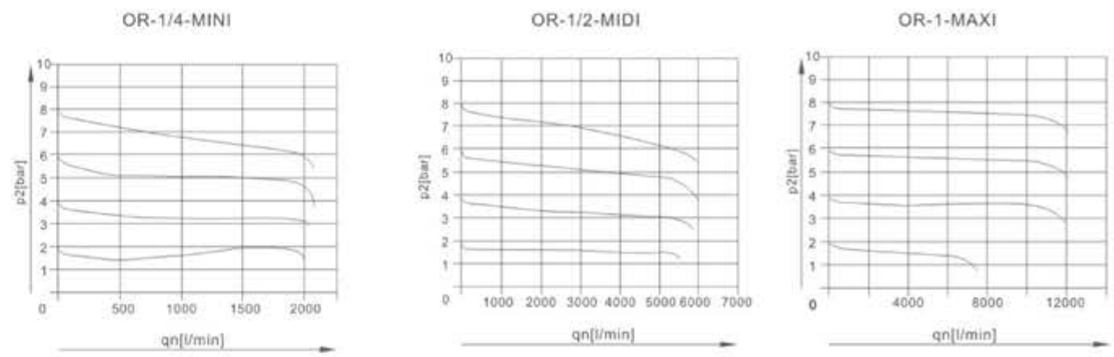

Primary pressure: p1=10 bar

XOF Series Air Filter

XOF-MINI

The OF with water separator cleans the compressed air of fluid oil,condensation and dirt particles,for special application,the standard 40 μ m filter element may easily be replaced by a 5 μ m filter relement.

Ordering Code

XO	F	—	MINI	1/4	—	□	—	□
Series XO Series	**Function code** Filter		**Body** MINI MIDI MAXI	**Port Size** G1/8" G1/4" G3/8" G1/2" G3/4" G1"		**Grade of Filtration** Blank:40μm 5M:5μm		**Drain Type** Blank: Turnd Manually A: Auto Drain Type

Specifcation

Filters		MINI			MIDI			MAXI	
40μm	Manual Drain	XOF-1/8-MINI	XOF-1/4-MINI	XOF-3/8-MINI	XOF-3/8-MIDI	XOF-1/2-MIDI	XOF-3/4-MIDI	XOF-3/4-MAXI	XOF-1-MAXI
5μm		XOF-1/8-5M-MINI	XOF-1/4-5M-MINI	XOF-3/8-5M-MINI	XOF-3/8-5M-MIDI	XOF-1/2-5M-MIDI	XOF-3/4-5M-MIDI	XOF-3/4-5M-MAXI	XOF-1-5M-MAXI
Medium		Compressed air							
Features of structure		Sintered filter with water spartor							
Mounting type		Pipe mounting or foot mounting							
Assembly position		Vertical ±5°							
Connection		G1/8"	G1/4"	G3/8"	G3/8"	G1/2"	G3/4"	G3/4"	G1"
Standard nominal flow rate	OF-...	1000	1200	1400	2700	3000	3000	5000	5300
	OF-...-5M	600	950	1100	1800	1900	1900	3200	3300
Primary pressure	Manual drain	1~16bar							
Grade of filtration		40μm/5μm							
Max.condensate capacity		22ml							
Temperature range		0~60℃							
Materials information		Housing:Zinc die-casting;Filter bowl :PC;Metal bowl guard: Aluminum alloy;Sealing:NBR							

Overall Dimensions

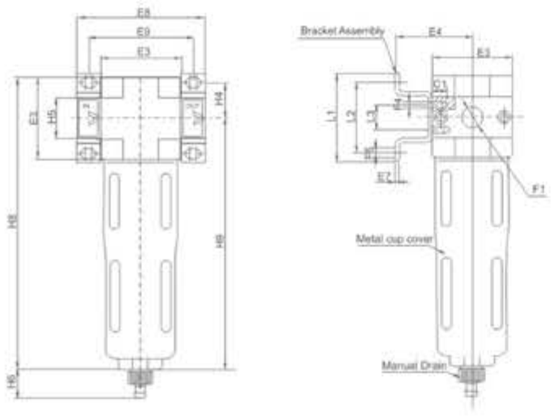

Graphic Symbol

Dimension Sheet

Model	E3	E4	E7	E8	E9	F1	F4	F5	L1	L2	L3	H4	H5	H6	H8	H9
XOF-...-MINI	40	39	2	64	52	G1/8",G1/4",G3/8"	M4	4.5	44	35	11	17.5	20	15	144	124
XOF-...-MIDI	55	47	3	85	70	G1/8",G1/2",G3/4"	M5	5.5	71	60	22	30	32	15	180	153
XOF-...-MAXI	66	53	3	96,116	80,91	G3/4",G1"	M5	5.5	71	60	22	30	32,40	15	203	170

XOF Series Air Filter

Internal structure

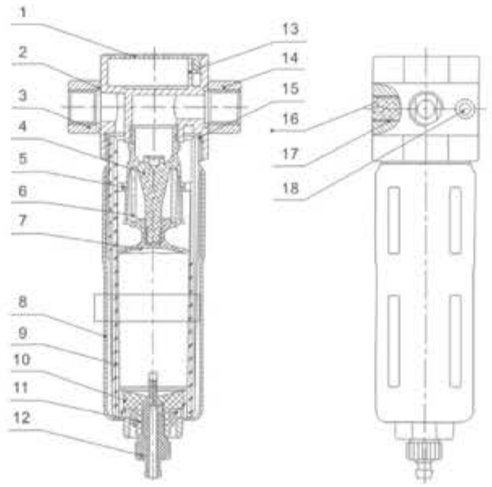

NO	Item	Material
1	Ornament cover(round)	POM
2	O-ring	NBR
3	Flange-IN	Zinc alloy
4	Filter element base	POM
5	Whirl wind impeller	POM
6	Filter element	PE
7	Manger	POM
8	Metal bowl guard	Aluminum alloy
9	Filter bowl	PC
10	O-ring	NBR
11	Inner joint	POM
12	Condensate drain	POM
13	OF Body	Zinc alloy
14	Flange-OUT	Zinc alloy
15	O-ring	NBR
16	Plug	POM
17	O-ring	NBR
18	Allen screw	S35C

Flow diagram

Standard flow rate qn as a function of the output pressure p2

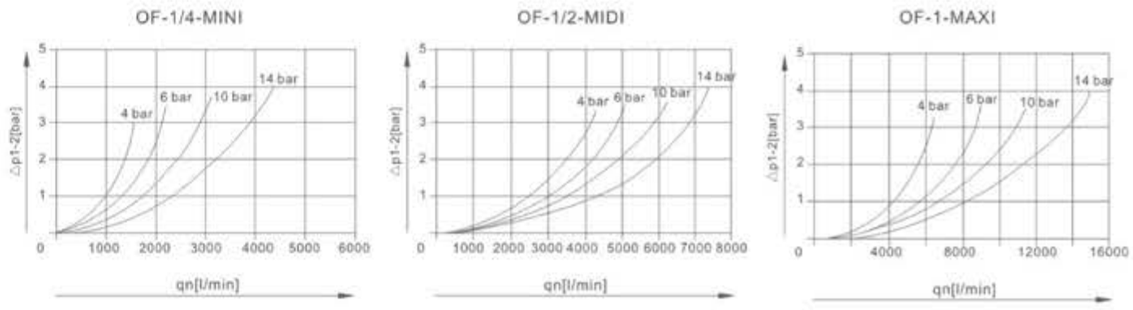

Primary pressure: p1=10 bar

XOL Series Lubricator

XOL-MINI

The direct constant-density lubricator add regulatd quantity oil to the compressed air.A valve maintains oil mist content proportional to the compressed oil flow.

The pressure drop that occurs when the air flow through a sight feed oil cup delives oil from the bowl to the sight oil indicator.The drop of the oil flows into the air channel when it is atomized.

The oil drop rate is controlled by means of the regulating screw.Normally,1 to 12 drops/1000L of the air is sufficient.

Ordering Code

XO	L	—	MINI	—	1/4
Series	**Function code**		**Body**		**Port Size**
XO Series	Lubricator		MINI MIDI MAXI		G1/8" G1/2" G1/4" G3/4" G3/8" G1"

Specifcation

Lubricators	MINI			MIDI			MAXI	
	XOL-1/8-MINI	XOL-1/4-MINI	XOL-3/8-MINI	XOL-3/8-MIDI	XOL-1/2-MIDI	XOL-3/4-MIDI	XOL-3/4-MAXI	XOL-1-MAXI
Medium	Compressed air							
Features of structure	Sintered filter with water separator The direct Constant-density Lubricator							
Mounting type	Pipe mounting or foot mounting							
Assembly position	Vertical ±5°							
Connection	G1/8"	G1/4"	G3/8"	G3/8"	G1/2"	G3/4"	G3/4"	G1"
Standard nominal flow rate	1300	2300	2700	5500	6100	6300	8400	9000
Max.Working pressure	16bar							
Min.Standard nominal flow rate	3 L/min			6 L/min			10 L/min	
Max.condensate capacity	22ml							
Temperature range	0~60℃							
Materials information	Housing:Zinc die-casting;Oil bowl and Drop cap :PC;Metal bowl guard:Aluminum alloy;Sealing:NBR							
Recommended oil	ISO VG 32 or the same grade							

Overall Dimensions

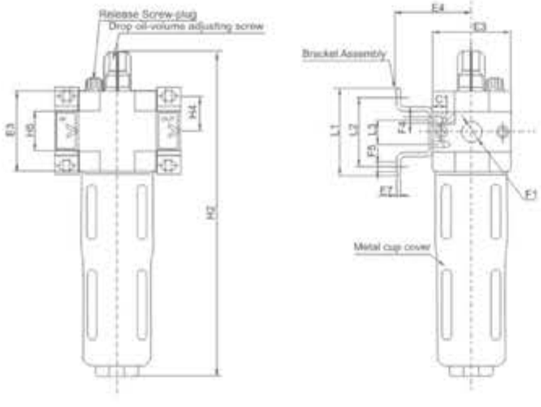

Graphic Symbol

Dimension Sheet

Model	E3	E4	E7	F1	F4	F5Φ	L1	L2	L3	H4	H5
XOL-...-MINI	40	39	2	G1/8",G1/4",G3/8"	M4	4.5	44	35	11	17.5	20
XOL-...-MIDI	55	47	3	G1/8",G1/2",G3/4"	M5	5.5	73	60	22	30	32
XOL-...-MAXI	66	53	3	G3/4",G1"	M5	5.5	73	60	22	30	32,40

XOL Series Lubricator

Internal structure

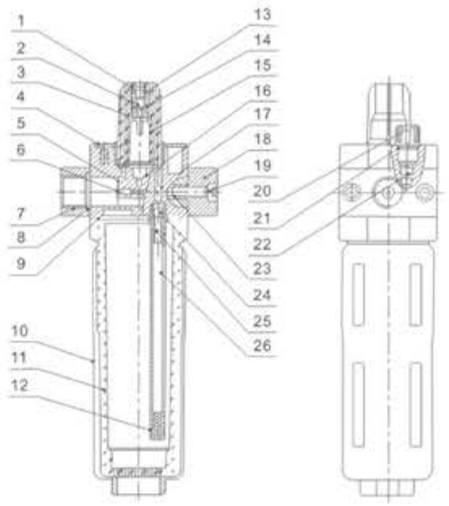

NO	Item	Material
1	Upper glass	PC
2	Adjust screw	Brass
3	O-ring	NBR
4	Ornament cover(circular)	PO
5	Windshield chip	NBR
6	Windshield base	Brass
7	Flange-IN	Zinc alloy
8	O-ring	NBR
9	O-ring	NBR
10	Metal bowl guard	Aluminum alloy
11	Lubricator bowl	PC
12	Oil-filter plup	Brass powder sintered
13	O-ring	NBR
14	Screw base	Brass
15	Oil dropping	PC
16	Seal piece	NBR
17	OL Body	Zinc alloy
18	Flange-OUT	Zinc alloy
19	Allen screw	S35C
20	Bleeder screw	POM
21	O-ring	NBR
22	Valve pin	Brass
23	Double-end bolt	SUS
24	Steel ball	SUS304
25	Oil tube connection	POM
26	Oil tube	PU

Flow diagram

Standard flow rate qn as a function of the output pressure p2

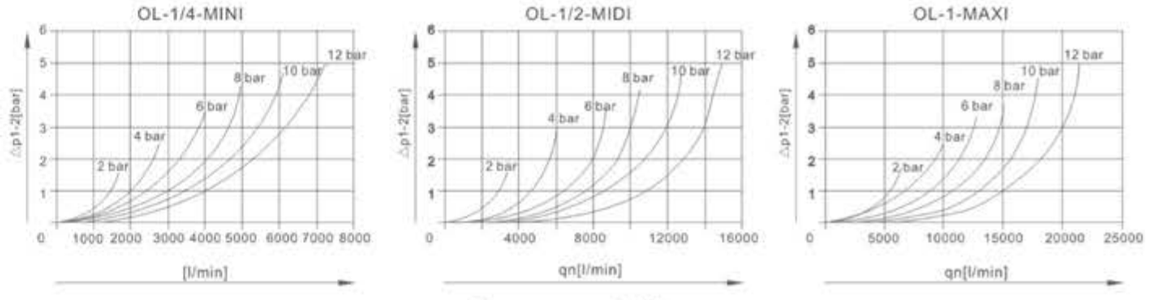

Primary pressure: p1=10 bar

XAC1000~5000 Series Air Source Treatment Unit(F.R.L Combination)

Overall Dimensions

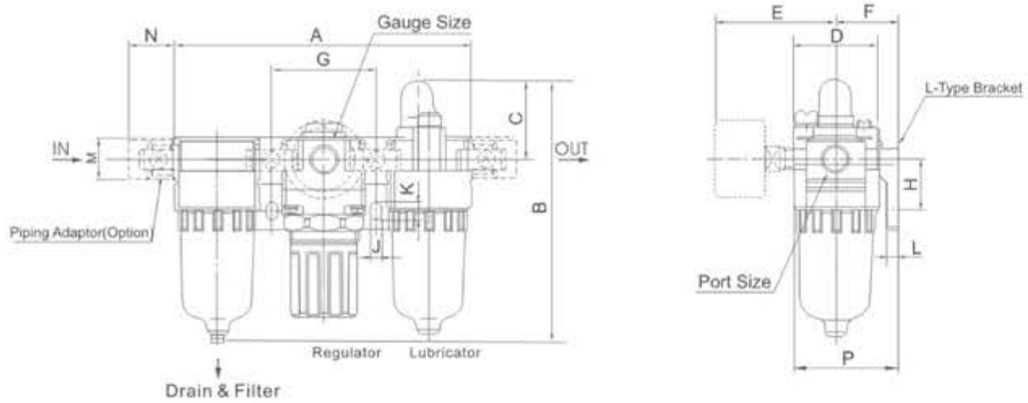

XAC1000~2000

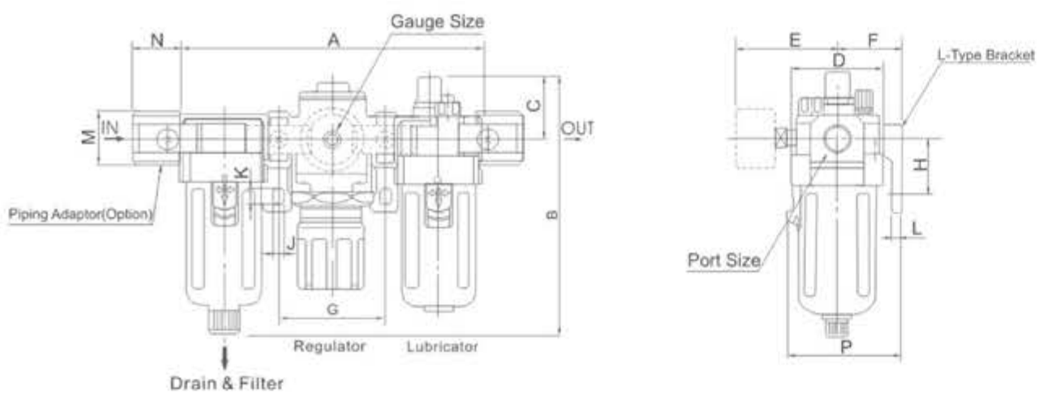

XAC3000~5000

Dimension Sheet

Model	Port Size(G)	A	B	C	D	E	F	G	H	J	K	L	M	N	P
XAC1000	M5	91	84.5	25.5	25	26	25	33	20	4.5	7.5	5	17.5	16	38.5
XAC2000	G1/8" ~G1/4"	140	125	38	40	56.8	30	50	24	5.5	8.5	5	22	23	50
XAC3000	G1/4" ~G3/8"	181	156.5	38	53	60.8	41	64	35	7	11	7	34.2	26	70.5
XAC4000	G3/8" ~1/2"	238	191.5	41	70	65.5	50	84	40	9	13	7	42.2	33	88
XAC4000-06	G3/4"	253	193	40.5	70	69.5	50	89	40	9	13	7	46.2	36	88
XAC5000	G3/4" ~G1"	300	271.5	48	90	75.5	70	105	50	12	16	10.5	55.5	40	115

XAC1010~5010 Series Air Source Treatment Unit(FR.L Combination)

XAC5010-10

XAC4010-04

XAC2010-02

XAC2000-02L

Graphic Symbol

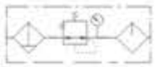

Ordering Code

XA	C	4010	—	04	□	□
Series XA series	**Function code** F.R.L Combination	**Body Size** 1010 2010 3010 4010 5010		**Port Size** M5:M5×0.8 01:G1/8" 02:G1/4" 03:G3/8" 04:G1/2" 06:G3/4" 10:G1"	**Drain Type** Blank:Manual Drain Type D:Auto Drain Type (Available for 2000 or above)	**Metal Cup** U: With Iron Cup L: With Aluminum Cup (Available for 2000)

Specifcation

Model		XAC1010 -M5	XAC2010 -01	XAC2010 -02	XAC3010 -02	XAC3010 -03	XAC4010 -03	XAC4010 -04	XAC4010 -06	XAC5010 -06	XAC5010 -10
Rated Flow(L/min)		90	500	500	1700	1700	3000	3000	3000	4000	4000
Port Size		M5	G1/8"	G1/4"	G1/4"	G3/8"	G3/8"	G1/2"	G3/4"	G3/4"	G1"
Filter Precision		25 μ									
Highest Working Pressure		1.0MPa									
Ensured pressure Resistance		1.5MPa									
Operating Temperature Range		5~60℃									
Range of Adjustable Pressure		0.05~0.7MPa	0.05~0.85MPa								
Recommended Oil Use		ISO VG 32									
Container Material		Polycarbonate									
Protective Cover		Not Available			Available						
Drain Function		Differential Drain			Differential Drain,Automatic Drain						
Valve Type		With Over flow									
Composing Elements	Filter&Regulator	XAW1000-M5	XAW2000-01	XAW2000-02	XAW3000-02	XAW3000-03	XAW4000-03	XAW4000-04	XAW4000-06	XAW5000-06	XAW5000-10
	Lubricator	XAL1000-M5	XAL2000-01	XAL2000-02	XAL3000-02	XAL3000-03	XAL4000-03	XAL4000-04	XAL4000-06	XAL5000-06	XAL5000-10

■ Note:We have upgraded Oil Drop Accessories on Lubricator of XA series 2000-5000 same to the XO series.

XAC1010~5010 Series Air Source Treatment Unit(FR.L Combination)

Overall Dimensions

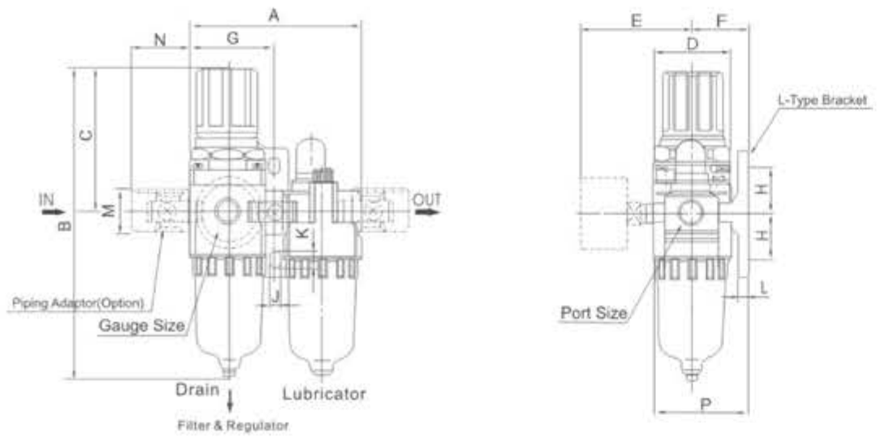

XAC1010~2010

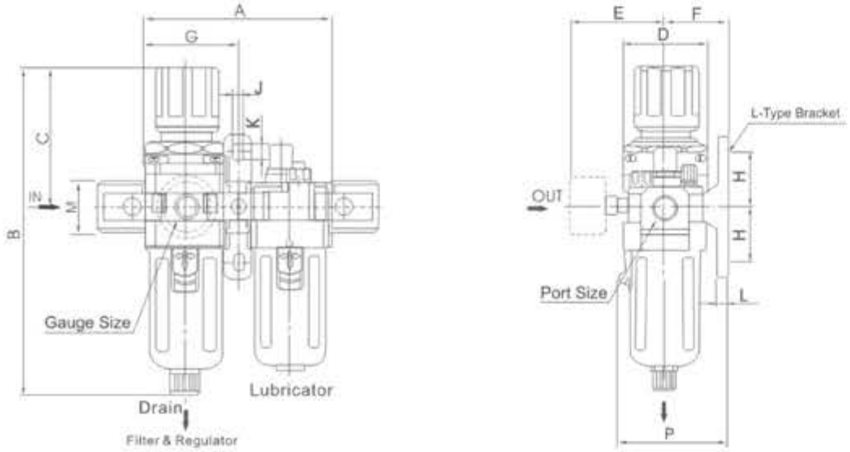

XAC3010~5010

Dimension Sheet

Model	Port Size(G)	A	B	C	D	E	F	G	H	J	K	L	M	N	P
XAC1010	M5	58	109.5	50.5	25	26	25	29	20	4.5	7.5	5	17.5	16	38.5
XAC2010	G1/8" ~G1/4"	90	164.5	78	40	56.8	30	45	24	5.5	8.5	5	22	23	50
XAC3010	G1/4" ~G3/8"	117	211	92.5	53	60.8	41	58.5	35	7	11	7	34.2	26	70.5
XAC4010	G3/8" ~1/2"	154	262	112	70	70.5	50	77	40	9	13	7	42.2	33	88
XAC4010-06	G3/4"	164	267	114	70	70.5	50	82	40	9	13	7	46.2	36	88
XAC5010	G3/4" ~G1"	195	338	116	90	75.5	69.8	97.5	50	12	16	10.5	55.5	40	115

XAF1000~5000 Series Air Filter

XAF5000–10 XAF4000–04 XAF2000–02

Ordering Code

XA	F	4000	—	04	□	□
Series XA series	**Function code** Filter	**Body Size** 1000 2000 3000 4000 5000		**Port Size** M5:M5×0.8 01:G1/8" 02:G1/4" 03:G3/8" 04:G1/2" 06:G3/4" 10:G1"	**Drain Type** Blank:Manual Drain Type D:Auto Drain Type (Available for 2000 or above)	**Metal Cup** U: With Iron Cu L: With Alumin Cup (Available for 2000)

Graphic Symbol

Specifcation

Model	XAF1000 -M5	XAF2000 -01	XAF2000 -02	XAF3000 -02	XAF3000 -03	XAF4000 -03	XAF4000 -04	XAF4000 -06	XAF5000 -06	XAF5000 -10
Rated Flow(L/min)	110	750	750	1500	1500	4000	4000	6000	7000	7000
Port Size	M5	G1/8"	G1/4"	G1/4"	G3/8"	G3/8"	G1/2"	G3/4"	G3/4"	G1"
Filter Precision	25 μ									
Highest Working Pressure	1.0MPa									
Ensured pressure Resistance	1.5MPa									
Operating Temperature Range	5~60℃									
Container Material	Polycarbonate									
Protective Cover	Not Available			Available						
Drain Function	Differential Drain			Differential Drain,Automatic Drain						

Overall Dimensions

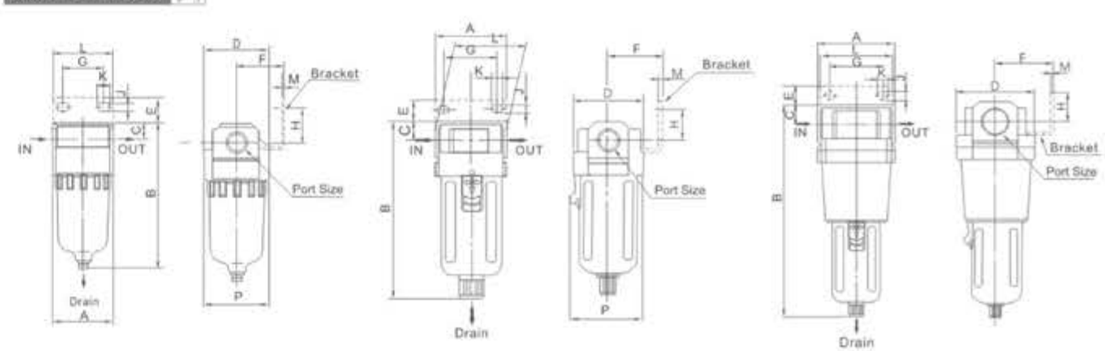

XAF1000~2000 XAF3000~4000 XAF5000

Dimension Sheet

Model	Port Size(G)	A	B	C	D	E	F	G	H	J	K	L	M	P
XAF1000	M5	25	66	7	25	-	-	-	-	-	-	-	-	26.5
XAF2000	G1/8" ~G1/4"	40	97.5	11	40	17	30	27	22	5.4	8.4	40	2.3	40
XAF3000	G1/4" ~G3/8"	53	132.5	14	53	16	41	40	23	6.5	8	53	2.3	56
XAF4000	G3/8" ~1/2"	70	168.5	18	70	17	50	54	26	8.5	10.5	70	2.3	73
XAF4000-06	G3/4"	75	172.5	20	70	14	50	54	25	8.5	10.5	70	2.3	73
XAF5000	G3/4" ~G1"	90	247.5	24	90	23	66.5	66	35	11	13	90	3.2	90

XAR 1000~5000 Series Regulator

XAR5000-10

XAR4000-04

XAR2000-02

Ordering Code

XA	R	4000	—	04
Series	**Function code**	**Specification Code**		**Port Size**
XA series	Regulator	1000 2000 3000 4000 5000		M5:M5×0.8 01:G1/8" 02:G1/4" 03:G3/8" 04:G1/2" 06:G3/4" 10:G1"

Graphic Symbol

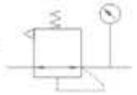

Specifcation

Model	XAR1000 -M5	XAR2000 -01	XAR2000 -02	XAR3000 -02	XAR3000 -03	XAR4000 -03	XAR4000 -04	XAR4000 -06	XAR5000 -06	XAR5000 -10
Rated Flow	100	550	550	2500	2500	6000	6000	6000	8000	8000
Port Size	M5	G1/8"	G1/4"	G1/4"	G3/8"	G3/8"	G1/2"	G3/4"	G3/4"	G1"
Highest Working Pressure	1.0MPa									
Ensured pressure Resistance	1.5MPa									
Operating Temperature Range	5~60℃									
Range of Adjustable Pressure	0.05~0.7MPa	0.05~0.85MPa								
Valve Type	With Overflow									

Overall Dimensions

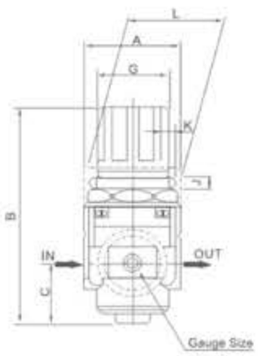

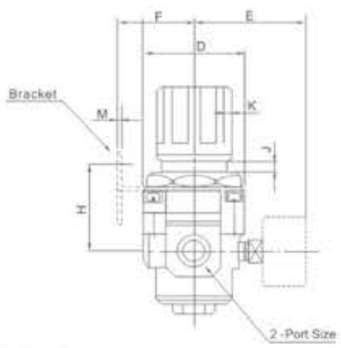

XAR1000~5000

AR1000~3000:Max3.5
AR4000~5000:Max5

Dimension Sheet

Model	Port Size(G)	A	B	C	D	E	F	G	H	J	K	L	M	N
XAR1000	M5	25	61.5	11	25	26	25	28	30	4.5	6.5	40	2	20.5
XAR2000	G1/8" ~G1/4"	40	95	17	40	56.8	30	34	44	5.4	15.4	55	2.3	33.5
XAR3000	G1/4" ~G3/8"	53	127.5	35	53	60.8	41	40	46	6.5	8	53	2.3	42.5
XAR4000	G3/8" ~1/2"	70	149.5	37.5	70	65.5	50	54	54	8.5	10.5	70	2.3	52.5
XAR4000-06	G3/4"	75	154	40.5	70	69.5	50	54	56	8.5	10.5	70	2.3	52.5
XAR5000	G3/4" ~G1"	90	168	48	90	75.5	70	66	65.8	11	13	90	3.2	52.5

XAW 1000~5000 Series Filter & Regulator

XAW5000-10

XAW4000-04

XAW2000-02

Ordering Code

XA	W	4000	—	04	□	□
Series	**Function code**	**Specification Code**		**Port Size**	**Drain Type**	**Metal Cup**
XA series	Filter & Regulator	1000 2000 3000 4000 5000		M5:M5×0.8 01:G1/8" 02:G1/4" 03:G3/8" 04:G1/2" 06:G3/4" 10:G1"	Blank:Manual Drain Type D:Auto Drain Type (Available for 2000 or above)	U: With Iron Cup L: With Aluminum Cup (Available for 2000)

Graphic Symbol

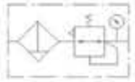

Specifcation

Model	XAW1000 -M5	XAW2000 -01	XAW2000 -02	XAW3000 -02	XAW3000 -03	XAW4000 -03	XAW4000 -04	XAW4000 -06	XAW5000 -06	XAW5000 -10
Rated Flow(L/min)	100	550	550	2000	2000	4000	4000	4500	5500	5500
Port Size	M5	G1/8"	G1/4"	G1/4"	G3/8"	G3/8"	G1/2"	G3/4"	G3/4"	G1"
Filter Precision	25μ									
Highest Working Pressure	1.0MPa									
Ensured pressure Resistance	1.5MPa									
Operating Temperature Range	5~60℃									
Range of Adjustable Pressure	0.05~0.7MPa	0.05~0.85MPa								
Container Material	Polycarbonate									
Protective Cover	Not Available	Available								
Drain Function	Differential Drain	Differential Drain,Automatic Drain								
Valve Type	With Overflow									

Overall Dimensions

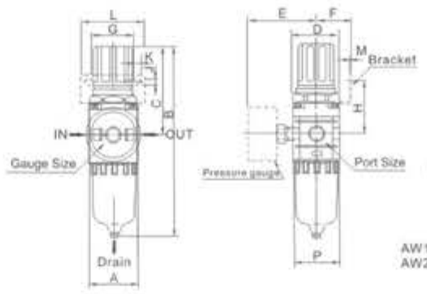

AW1000:Max.gage 3.5
AW2000:Max.gage 5

XAW1000~2000

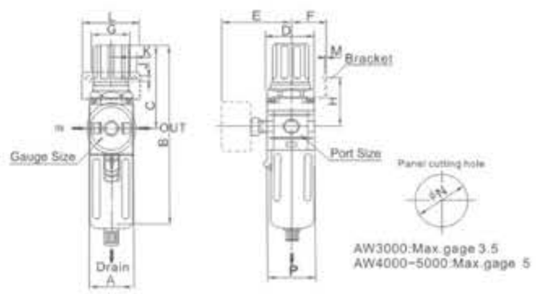

AW3000:Max.gage 3.5
AW4000~5000:Max.gage 5

XAW3000~5000

Dimension Sheet

Model	Port Size(G)	A	B	C	D	E	F	G	H	J	K	L	M	N	P
XAW1000	M5	25.	109.5	50.5	25	26	25	28	30	4.5	6.5	40	2	20.5	28
XAW2000	G1/8" ~G1/4"	40	164.5	78	40	56.8	30	34	43.5	5.4	15.4	55	2.3	33.5	40
XAW3000	G1/4" ~G3/8"	53	211	92.5	53	60.8	41	40	46	6.5	8	53	2.3	42.5	56
XAW4000	G3/8" ~1/2"	70	262	112	70	70.5	50	54	53.5	8.5	10.5	70	2.3	52.2	73
XAW4000-06	G3/4"	75	267	114	70	70.5	50	54	55.5	8.5	10.5	70	2.3	52.5	73
XAW5000	G3/4" ~G1"	90	338	116	90	75.5	69.8	54	62	8.5	10.5	70	3.2	52.5	90

AFC,BFC Series Air Source Treatment Unit(FR.L Combination)

BFC4000

AFC2000

Ordering Code

BFC — **3000** — □

Series
AFC:Small Size
BFC:Middle Size

Port Size
1500:G1/8"
2000:G1/4"
3000:G3/8"
4000:G1/2"

Drain Type
Blank:Manual Drain Type
D:Auto Drain Type

Graphic Symbol

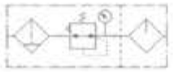

Specifcation

Model		AFC1500	AFC2000	BFC2000	BFC3000	BFC4000
Operating Fluid				Air		
Port Size		G1/8"	G1/4"	G1/4"	G3/8"	G1/2"
Filtering Element Reughness				40 μ		
Range of Adjustable Pressure				0.05~0.85MPa		
Max Adjustable Pressure				0.95MPa		
Ensured Pressure Resistance				1.5MPa		
Operating Temperature Range				5~60℃		
Capacity of Filter Cup			15 cc	60 cc		
Capacity of Oil Feed Cup			25 cc	90 cc		
Suggested Lube				ISO VG 32 or Same Grade Oil		
Material	Body			Aluminum Die-casting Forming		
	Container Cup			PE		
	Protective Cup Cover		-	Iron		
Composing Elements	Fitier & Regulator	AFR1500	AFR2000	BFR2000	BFR3000	BFF4000
	Lubricator	AL1500	AL2000	BL2000	BL3000	BL4000

Overall Dimensions

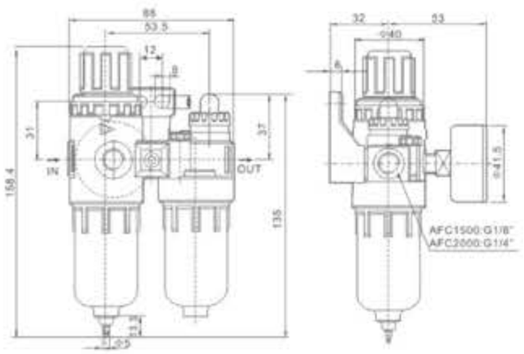

AFC Series

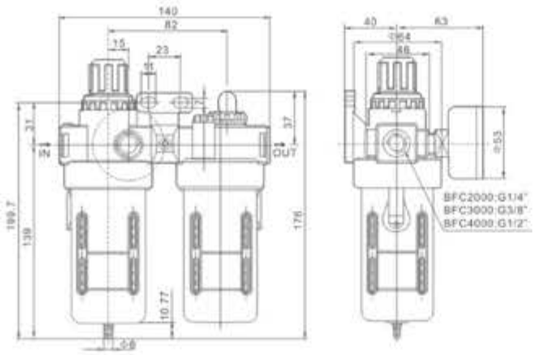

BFC Series

AFR,BFR Series Filter&Regulator

BFR4000

AFR2000

Ordering Code

BFR — **3000** — □

Series
AFR:Small Size
BFR:Middle Size

Port Size
1500:G1/8"
2000:G1/4"
3000:G3/8"
4000:G1/2"

Drain Type
Blank:Manual Drain Type
D:Auto Drain Type

Graphic Symbol

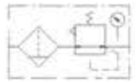

Specifcation

Model		AFR1500	AFR2000	BFR2000	BFR3000	BFR4000
Operating Fluid				Air		
Port Size		G1/8"	G1/4"	G1/4"	G3/8"	G1/2"
Range of Adjustable Pressure				0.05~0.85MPa		
Max Adjustable Pressure				0.95MPa		
Ensured Pressure Resistance				1.5MPa		
Operating Temperature Range				5~60℃		
Capacity of Filter Cup			15 cc	60 cc		
Material	Body			Aluminum Die-casting Forming		
	Container Cup			PE		
	Protective Cup Cover		-	Iron		

Overall Dimensions

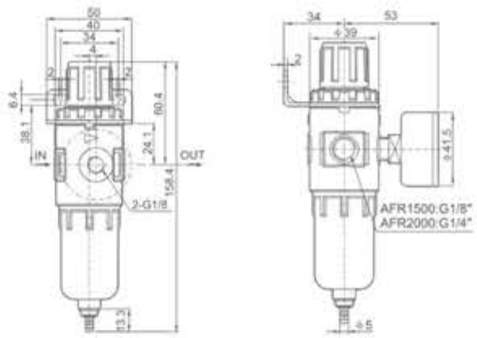

AFR Series

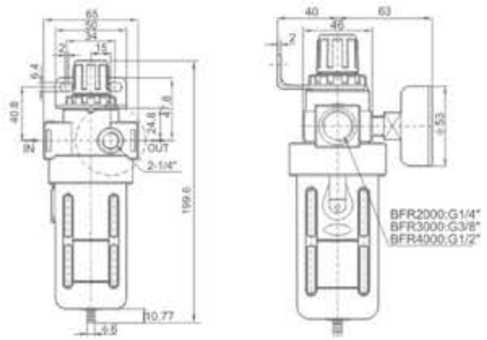

BFR Series

AF,BF Series Air Filter

BF4000

AF2000

Ordering Code

BF	3000	—	□
Series	Port Size		Drian Type
AF:Small Size BF:Middle Size	1500:G1/8" 2000:G1/4" 3000:G3/8" 4000:G1/2"		Blank:Manual Drain Type D:Auto Drain Type

Graphic Symbol

Specifcation

Model		AF1500	AF2000	BF2000	BF3000	BF4000
Operating Fluid				Air		
Port Size		G1/8"	G1/4"	G1/4"	G3/8"	G1/2"
Filtering Element Reughness				40 μ		
Ensured Pressure Resistance				1.5MPa		
Operating Temperature Range				5~60℃		
Capacity of Filter Cup		15 cc		60 cc		
Material	Body	Aluminum Die-casting Forming				
	Container Cup	PE				
	Protective Cup Cover	-		Iron		

Overall Dimensions

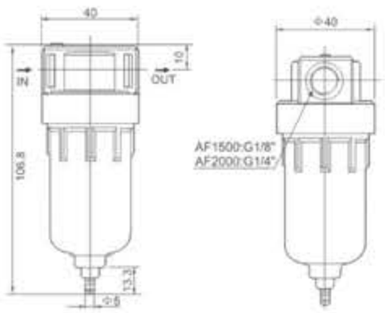

AF Series

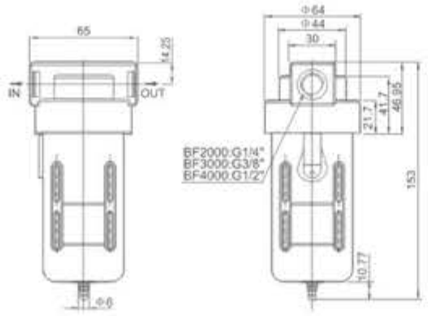

BF Series

AR,BR Series Regulator

BR4000

AR2000

Ordering Code

BR	2000
Series	Port Size
AR:Small Size BR:Middle Size	1500:G1/8" 2000:G1/4" 3000:G3/8" 4000:G1/2"

Graphic Symbol

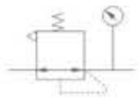

Specifcation

Model	AR1500	AR2000	BR2000	BR3000	BR4000
Operating Fluid			Air		
Port Size	G1/8"	G1/4"	G1/4"	G3/8"	G1/2"
Range of Adjustable Pressure			0.05~0.85MPa		
Max.Adjustable Pressure			0.95MPa		
Ensured Pressure Resistance			1.5MPa		
Operating Temperature Range			5~60℃		
Material of Body			Aluminum Die-casting Forming		

Overall Dimensions

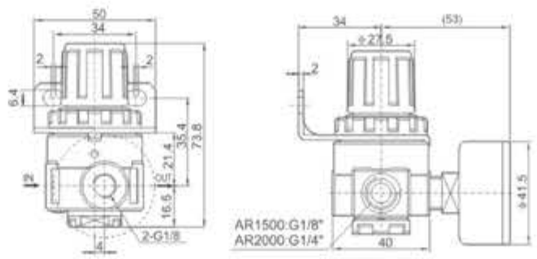

AR Series

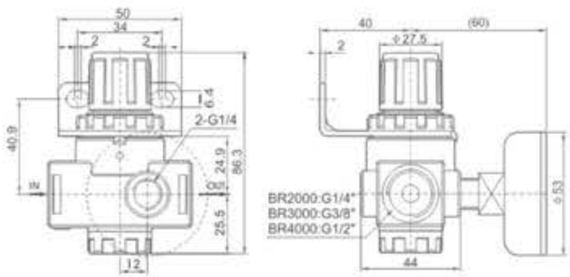

BR Series

H Series High Pressure Filter & Regulator

QTYH-25

Ordering Code

QFRH — 15

High pressure Filter & Regulator

Connection
8:G1/4" 10:G3/8"
15:G1/2" 20:G3/4"
25:G1"

Graphic Symbol

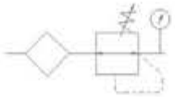

Specifcation

Operating Fluid	Air
Filtering Eliment Roughness	20μm or 40μm
Range of Adjustable Pressure	0.15~3.5MPa
Max. Input pressure	4MPa
Operating Temperature Range	5~80℃

H Series High Pressure Regulator

QTYH-25

Ordering Code

QTYH — 15

High pressure Regulator

Connection
8:G1/4" 10:G3/8"
15:G1/2" 20:G3/4"
25:G1"

Graphic Symbol

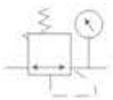

Specifcation

Operating Fluid	Air
Range of Adjustable Pressure	0.05~3.5MPa
Max. Input pressure	4MPa
Operating Temperature Range	-25~80℃

H Series High Pressure Filter

QSLH-15

Ordering Code

QSLH — 15

High Pressure Filter

Pors Size
8:G1/4"
10:G3/8"
15:G1/2"
20:G3/4"
25:G1"

Graphic Symbol

Specifcation

Operating Fluid	Air
Filtering Eliment Roughness	20μm or 40μm
Working of Adjustable Pressure	0.15~3.5MPa
Max. Input pressure	4MPa
Operating Temperature Range	-25~80℃

PIR Series Precision Regulator

PIR2010-02

Port Size G1/8",G1/4",G3/8"
Standard Type, Auto Drain Type and Metal Cup as Optional.

Designed to be compact and light weight with high output flow and precise setting pressure, Can be mounted easily with bracket or assemble with XA series F.R.L.

Graphic Symbol

Ordering Code

PIR 20 00 — 02

Series
PIR series

Valve Body Size
10
20
30

Pressure Range
00(0.005~0.2Mpa)
10(0.05~0.4Mpa)
20(0.01~0.8Mpa)

Port Size
01:G1/8"
02:G1/4"
03:G3/8"
04:G1/2"

Order Example

1):PIR Series, Valve Body: 20, Port Size: G1/4, Pressure Range: 10, Model: PIR-2010-02
1):PIR Series, Valve Body: 30, Port Size: G1/2, Pressure Range: 20, Model: PIR-3010-04

Specifcation

Specification	PIR1000-01	PIR1010-01	PIR1020-01	PIR2000-02	PIR2010-02	PIR2020-02	PIR3000-03/04	PIR3010-03/04	PIR3020-03/04
Pressure Range	0.005~0.2	0.01~0.4	0.01~0.8	0.005~0.2	0.01~0.2	0.01~0.8	0.01~0.2	0.01~0.4	0.01~0.8
Port Size	G1/8			G1/4			G3/8、G1/2		
Air consumption	Max 3.5L/min			Max 3.1L/min			Max 9.5L/min	Outlet: Max 2L/min	
Minimum pressure	Setting pressure+0.05			Setting pressure+0.05			Setting pressure+0.05		
Maximum pressure	1.0MPa								
Sensitivity	Within 0.2% of full span								
Repeatability	Within ±0.5% of full span								
Ambient and Fluid Temperature	-5~+60 (with no freezing)								
Pressure Gauge Port	G1/8								

Overall Dimensions

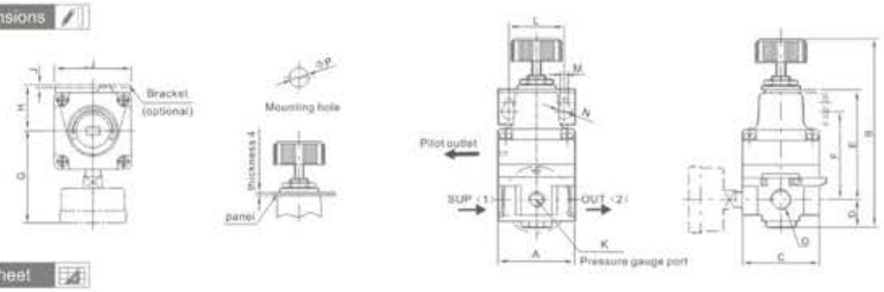

Dimension Sheet

Model	A	B	C	D	E	F	G	H	I	J	K	L	M	N	O	P
PIR1000-01	35	90	35	10	51	44	43	25	42	2	G1/8	28	4.5	ϕ8.5	G1/8	ϕ10.5
PIR1010-01	35	90	35	10	51	44	43	25	42	2	G1/8	28	4.5	ϕ8.5	G1/8	ϕ10.5
PIR1020-01	35	90	35	10	51	44	43	25	42	2	G1/8	28	4.5	ϕ8.5	G1/8	ϕ10.5
PIR2000-02	50	123	50	18	71	63	60	30	50	2	G1/8	36	5.5	ϕ9.5	G1/8	ϕ12.5
PIR2010-02	50	123	50	18	71	63	60	30	50	2	G1/8	36	5.5	ϕ9.5	G1/8	ϕ12.5
PIR2020-02	50	123	50	18	71	63	60	30	50	2	G1/8	36	5.5	ϕ9.5	G1/8	ϕ12.5
PIR3000-03	66	148	66	22	76	76	68	48	82	2.3	G1/8	60	9	ϕ15.5	G3/8	ϕ12.5
PIR3010-03	66	148	66	22	76	76	68	48	82	2.3	G1/8	60	9	ϕ15.5	G1/2	ϕ12.5
PIR3020-03	66	148	66	22	76	76	68	48	82	2.3	G1/8	60	9	ϕ15.5		ϕ12.5

4V、3V200 Series Solenoid Valve,4A、3A 200 Series Pneumatic Control Valve

4A210-08

4V210-08

3A220-08

3V220-08

Ordering Code

4V	2	10	—	08	□	—	AC220V	—	□
Specification Code	Series Code	Coil and Places		Port Size	Port connection and Initial State		Standard Voltage		Wiring Form

Specification Code
4V:Two(Three)-position Five-way Solenoid Valve
4A:Two(Three)-position Five-way pneumatic control valve
3V:Two-position Three-way Solenoid Valve
3A:Two-position Three-way Pneumatic Control Valve

Series Code
200 Series

Coil and Places
10:Single-head double-position
20:Double-head double-position
30C:Double-head Three-position Close Type
30E:Double-head Three-position Exhaust Type
30P:Double-head Three-position Pressure Type

Port Size
06:G1/8"
08:G1/4"

Port connection and Initial State
NC:Two-position Three-way Normal Close Type
NO:Two-positiOn Three-way Normal Open Type

Standard Voltage
DC12V
DC24V
AC24V 50Hz/60Hz
AC110V 50Hz/60Hz
AC220V 50Hz/60Hz
AC380V 50Hz/60Hz

Wiring Form
Blank:Standard Connector
LD:Brown With Lighting Connector
LD1:White With Lighting Connector
W:Lead Wire Type

Specifcation

Model	4V210-06	4V220-06	4V230C-06	4V230E-06	4V230P-06	4V210-08	4V220-08	4V230C-08	4V230E-08	4V230P-08
	4A210-06	4A220-06	4A230C-06	4A230E-06	4A230P-06	4A210-08	4A220-08	4A230C-08	4A230E-08	4A230P-08
Position and Way NO.	Two-position Five-way		Three-position Five-way			Two-position Five-way		Three-position Five-way		
Effective Sectional Area	14mm²(CV=0.78)		12mm²(CV=0.67)			16mm²(CV=0.89)		12mm²(CV=0.67)		

Model	3V210-06	3V220-06	3A210-06	3A220-06	3V210-08	3V220-08	3A210-08	3A220-08
Position and Way NO.	Two-position Three-way				Two-position Three-way			
Effective Section Area	14mm²(CV=0.78)				16mm²(CV=0.89)			
Joint Pipe Bore	Air Inlet=Air Outlet=Exhaust=G1/8"				Air Inlet=Air Outlet 1/4" Exhaust=Gl/"1/8"			
Working Medium	40 Micron Filtered Air							
Motion Pattern	Inner Guide Type							
Working-pressure	0.15~0.8 M Pa							
Max. Pressure Resistance	1.2MPa							
Operating Temperature	5~50℃							
Voltage Range	±10%							
Power Consumption	AC: 2.5VA DC: 2.5W							
Insulation & Protection Class	F Class. IP65							
Wiring Form	Lead Wire or Connector type							
Highest Action Frequency	5 Cycle / Sec							
Shortest Excitation Time	0.05 Second							

4V、3V200 Series Solenoid Valve,4A、3A200 Series Pneumatic Control Valve

Overall Dimensions

4V210-06

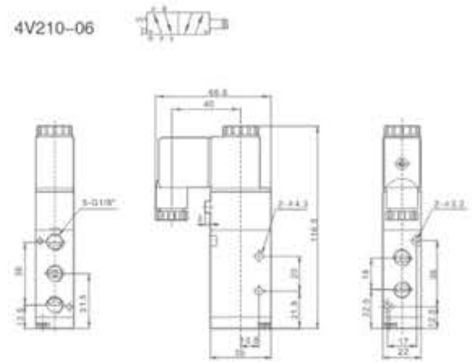

4V210-08

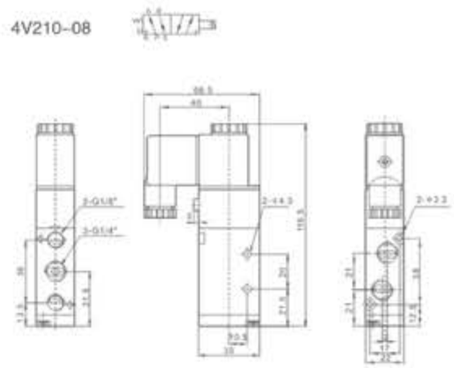

4V220-06

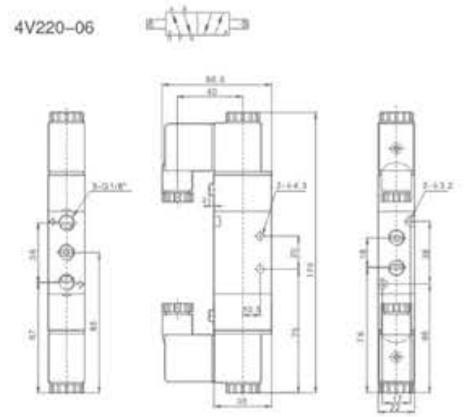

4V220-08

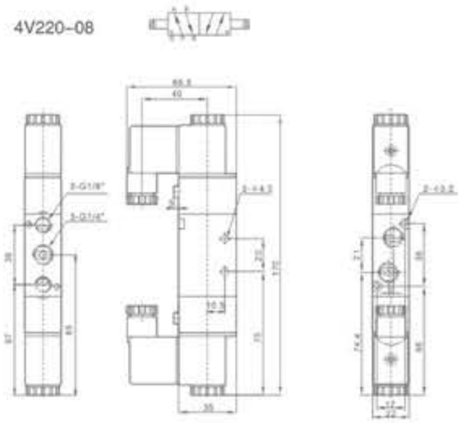

4V230-06

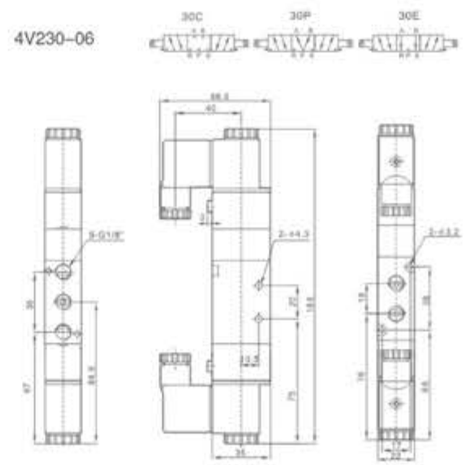

4V230-08

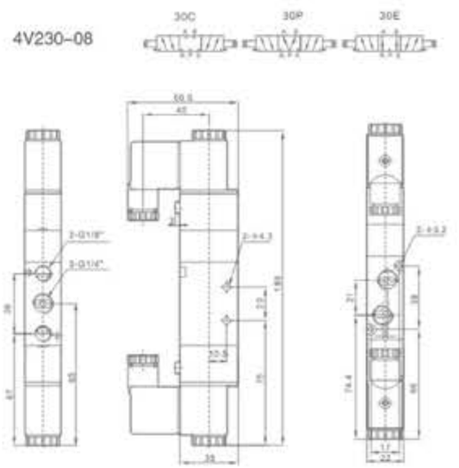

4V、3V300 Series Solenoid Valve,4A、3A 300 Series Pneumatic Control Valve

4A310-10

4V320-10

3A310-10

3V310-10

Ordering Code

4V	3	10	—	10	□	—	AC220V	—	□
Specification Code	**Series Code**	**Coil and Places**		**Port Size**	**Port connection and Initial State**		**Standard Voltage**		**Wiring Form**
4V:Two(Three)-position Five-way Solenoid Valve 4A:Two(Three)-position Five-way pneumatic control Valve 3V:Two-position Three-way Solenoid Valve 3A:Two-position Three-way Pneumatic Control Valve	300 Series	10:Single-head Double-position 20:Double-head Double-position 30C:Double-head Three-position Close Type 30E:Double-head Three-position Exhaust Type 30P:Double-head Three-position Pressure Type		08:G1/4" 10:G3/8"	NC:Two-position Three-way Normal Close Type NO:Two-position Three-way Normal Open Type		DC12V DC24V AC24V 50Hz/60Hz AC110V 50Hz/60Hz AC220V 50Hz/60Hz AC380V 50Hz/60Hz		Blank:Standard Connector LD:Brown With Lighting Connector LD1:White With Lighting Connector W:Lead Wire Type

Specifcation

Model	4V310-08	4V320-08	4V330C-08	4V330E-08	4V330P-08	4V310-10	4V320-10	4V330C-10	4V330E-10	4V330P-10
	4A310-08	4A320-08	4A330C-08	4A330E-08	4A330P-08	4A310-10	4A320-10	4A330C-10	4A330E-10	4A330P-10
Position and Way NO.	Two-position Five-way		Three-position Five-way			Two-position Five-way		Three-position Five-way		
Effective Sectional Area	25mm²(CV=1.40)		18mm²(CV=1.00)			30mm²(CV=1.68)		18mm²(CV=1.00)		

Model	3V310-08	3V320-08	3A310-08	3A320-08	3V310-10	3V320-10	3A310-10	3A320-10
Position and Way NO.	Two-position Three-way				Two-position Three-way			
Effective Section Area	25mm²(CV=1.40)				30mm²(CV=1.68)			
Joint Pipe Bore	Air Inlet=Air Outlet=Exhaust=G1/4"				Air Inlet=Air Outlet=3/8" Exhaust=G1/4"			
Working Medium	40 Micron Filtered Air							
Motion Pattern	Inner Guide Type							
Working-pressure	0.15~0.8 M Pa							
Max. Pressure Resistance	1.2MPa							
Operating Temperature	5~50℃							
Voltage Range	±10%							
Power Consumption	AC: 4.5VA DC: 3W							
Insulation & Protection Class	F Class. IP65							
Wiring Form	Lead Wire or Connector Type							
Highest Action Frequency	5 Cycle / Sec							
Shortest Excitation Time	0.05 Second							

4V、3V300 Series Solenoid Valve,4A、3A300 Series Pneumatic Control Valve

Overall Dimensions

4V310-08

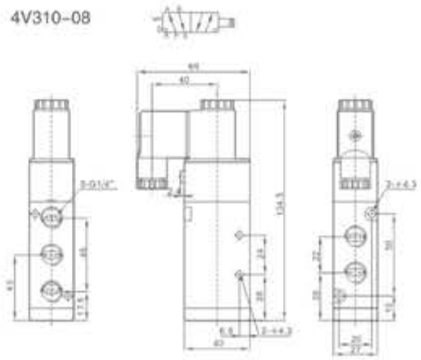

4V310-10

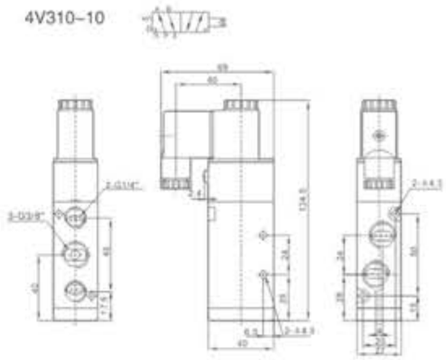

4V320-08

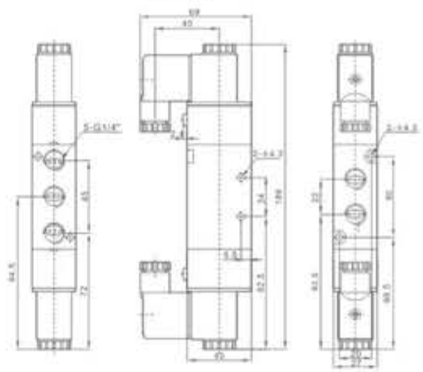

4V320-10

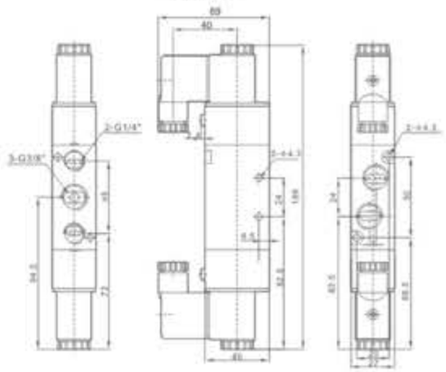

4V330-08

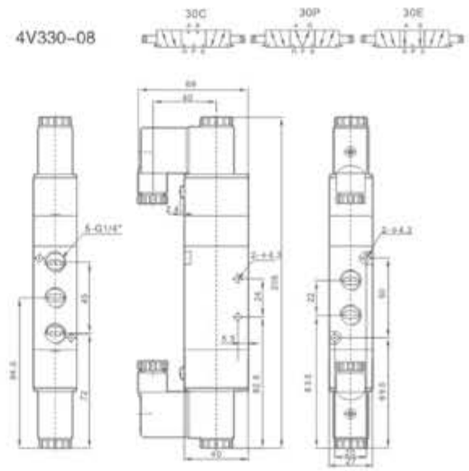

4V330-10

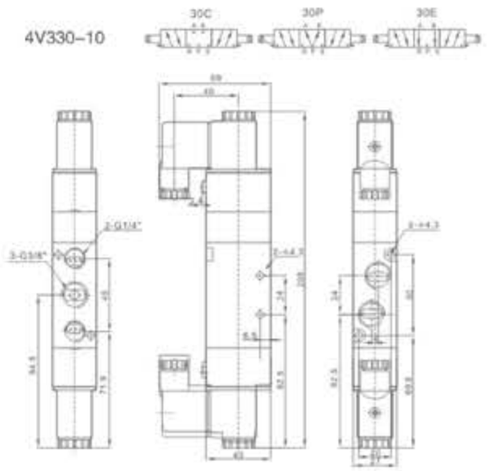

4V、3V400 Series Solenoid Valve,4A、3A 400 Series Pneumatic Control Valve

4A410-15

4V420-15

3A410-15

3V410-15

Ordering Code

4V	4	10	—	10	□	—	AC220V	—	□
Specification Code	Series Code	Coil and Places		Port Size	Port connection and Initial State		Standard Voltage		Wiring Form

Specification Code
4V:Two(Three)-position Five-way Solenoid Valve
4A:Two(Three)-position Five-way Pneumatic control Valve
3V:Two-position Three-way Solenoid Valve
3A:Two-position Three-way Pneumatic Control Valve

Series Code
400 Series

Coil and Places
10:Single-head Double-position
20:Double-head Double-position
30C:Double-head Three-position Close Type
30E:Double-head Three-position Exhaust Type
30P:Double-head Three-position Pressure Type

Port Size
10:G3/8"
15:G1/2"

Port connection and Initial State
NC:Two-position Three-way Normal Close Type
NO:Two-positiOn Three-way Normal Open Type

Standard Voltage
DC12V
DC24V
AC24V 50Hz/60Hz
AC110V 50Hz/60Hz
AC220V 50Hz/60Hz
AC380V 50Hz/60Hz

Wiring Form
Blank:Standard Connector
LD:Brown With Lighting Connector
LD1:White With Lighting Connector
W:Lead Wire Type

Specifcation

Model	4V410-15 / 4A410-15	4V420-15 / 4A420-15	4V430C-15 / 4A430C-15	4V430E-15 / 4A430E-15	4V430P-15 / 4A430P-15
Position and Way NO.	Two-position Five-way		Three-position Five-way		
Effective Sectional Area	50mm²(CV=2.79)		30mm²(CV=1.68)		

Model	3V410-15	3V420-15	3A410-15	3A420-15
Position and Way NO.	Two-position Three-way			
Effective Section Area	50mm²(CV=2.79)			
Joint Pipe Bore	Air Inlet=Air Outlet=Exhaust=G1/2"			
Working Medium	40 Micron Filtered Air			
Motion Pattern	Inner Guide Type			
Working-pressure	0.15~0.8 M Pa			
Max. Pressure Resistance	1.2MPa			
Operating Temperature	5~50℃			
Voltage Range	±10%			
Power Consumption	AC: 4.5VA DC: 3W			
Insulation & Protection Class	F Class. IP65			
Wiring Form	Lead Wire or Connector Type			
Highest Action Frequency	5 Cycle / Sec			
Shortest Excitation Time	0.05 Second			

4V、3V400 Series Solenoid Valve,4A、3A400 Series Pneumatic Control Valve

Overall Dimensions

4V410-15

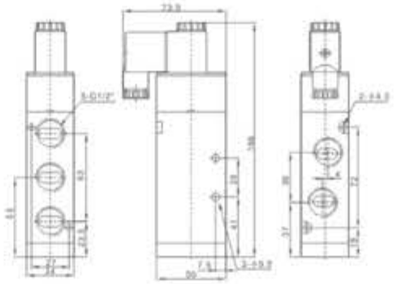

4V420-15
4V430-15

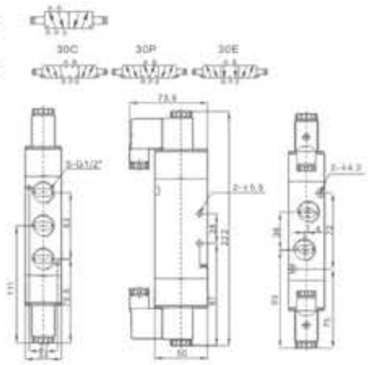

4A410-15

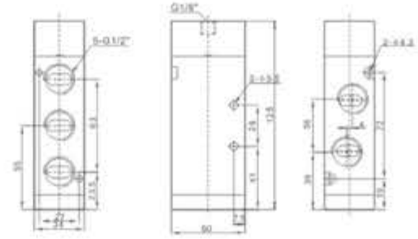

4A420-15
4A430-15

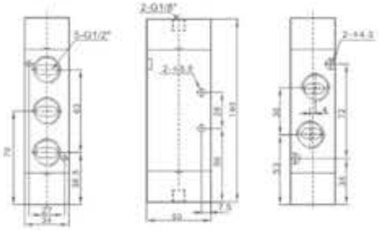

3V410-15

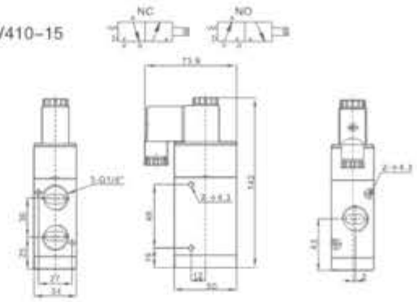

3V420-15

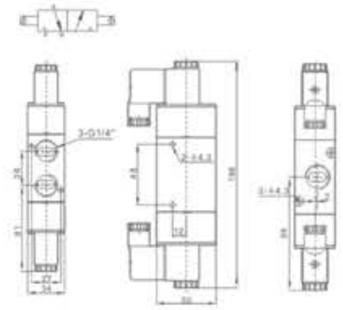

3A410-15

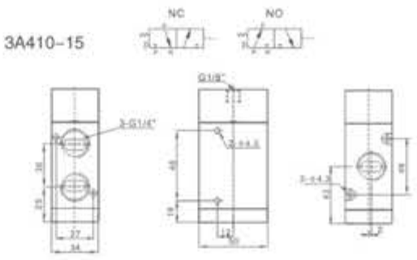

3A420-15

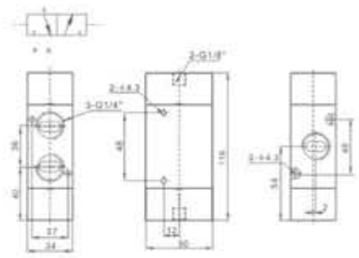

4M Series Plate Type Valve

4M210-08

4M310-10

4M220-08

Ordering Code

4M	2	10	—	06	—	AC220V	—	□
Specification Code	**Body Size**	**Coil and Places**		**Port Size**		**Standard Voltage**		**Wiring Form**
4M:Two-position Five-way Plate Type Valve	2:1/8" and 1/4" Valve body 3:1/4" and 3/8" Valve body	10:Single-head Double-position 20:Double-head Double-position		06:G1/8" 08:G1/4" 10:G3/8"		DC12V DC24V AC24V 50Hz/60Hz AC110V 50Hz/60Hz AC220V 50Hz/60Hz AC380V 50Hz/60Hz		Blank:Standard Connector LD:Brown With Lighting Connector LD1:White With Lighting Connector W:Lead Wire Type

Graphic Symbol

Internal structure

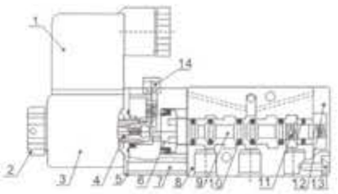

4M 210~310

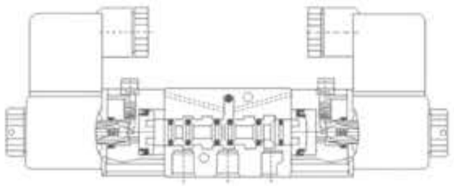

4M 220~320

NO	Designation	NO	Designation
1	Connector	8	Valve body
2	Nut	9	Spool
3	Coil	10	O-Ring
4	Pilot untis	11	Spring
5	Plate	12	Rear cover
6	Piston	13	Screw
7	Screw	14	Manual override

Specifcation

Model	4M210-06	4M220-06	4M210-08	4M220-08	4M310-08	4M320-08	4M310-10	4M320-10
Working Medium	40 Micron Filtered Air							
Motion Pattern	Inner Guide Type							
Position and Way NO.	Two-position Five-way							
Effective Section Area	14mm²(CV=0.78)		16mm²(CV=0.89)		25mm²(CV=1.39)		30mm²(CV=1.67)	
Port Size	Air Inlet=Exhaust=G1/8"		Air Inlet=G1/4"/Exhaust=G1/8"		Air Inlet=Exhaust=G1/4"		Air Inlet=G3/8"Exhaust=G1/4"	
Lubricate	Not Necessary							
Working-Pressure	0.15~0.8MPa							
Max.Pressure Resistance	1.2MPa							
Operating Temperature	5~60°C							
Voltage Range	-15%~+10%							
Power Consumption	AC380V:2.5VA,AC220V:2.0VA,AC110V:2.5VA,AC24V:3.5VA,DC24V:3.0W,DC12V:2.5W							
Insulation & Protection Class	F Class,IP65							
Wiring Form	Lead wire or Connector Type							
Highest Action Frequency	5 Cycle / Sec							
Shortest Excitation Time	0.05 Second							

4M Series Plate Type Valve

Overall Dimensions

4M210-06

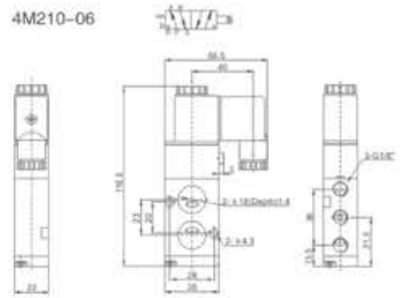

4M210-08

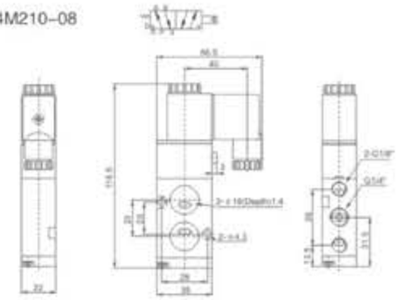

4M220-06

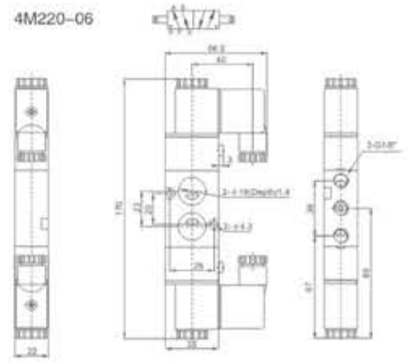

4M220-08

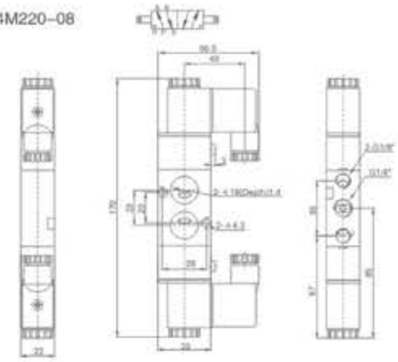

4M310-08

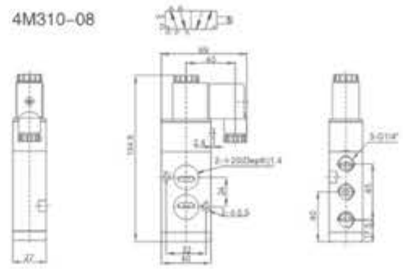

4M310-10

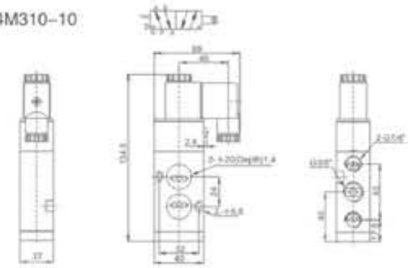

4M320-08

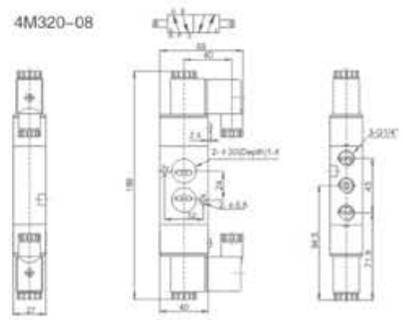

4M320-10

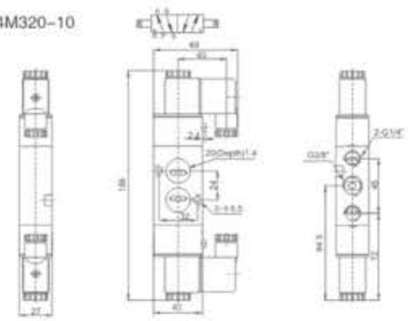

3V1 Series Solenoid Valve

3V1-06

Ordering Code

3V 1 06 – B – AC220V – □

Specification Code
3V: Two-position Three-way Solenoid Valve

Series Code
100 Series

Port Size
M5:M5×0.8
06:G1/8"

Connecting Type
Blank:Pipe Connection Type
B:Plate Connection Type

Standard Voltage
DC12v
DC24v
AC24v 50Hz/60Hz
AC110v 50Hz/60Hz
AC220v 50Hz/60Hz
AC380v 50Hz/60Hz

Wiring Form
Blank:Standard Connector
G:Lead Wire Type
L:With Lighting Connector

Specifcation

Model	3V1-M5	3V1-06
Working Medium	40 Micron Filtered Air	
Motion Pattern	Direct Drive Type	
Joint Pipe Bore	M5	1/8"
Ambient Temperature	-10~+60°C	
Gas Temperature	5~60°C	
Air Outlet Diameter	1.0mm	
Lubrication	Not Necessary	
Working-pressure	0~0.8MPa	
Max.Pressure Resistance	1.2MPa	
Power Consumption	AC:4.5VA DC:3.0W	
Protect Class	IP65	
Power Connection Form	Gorl	
Material of Body	Aluminum alloy	
Highest Action Frequency	10Cycle / Sec	
Insulation	F Class	
Voltage Range	±10%	
Shortest Excitation Time	0.05 Second	

Overall Dimensions

3V1-06

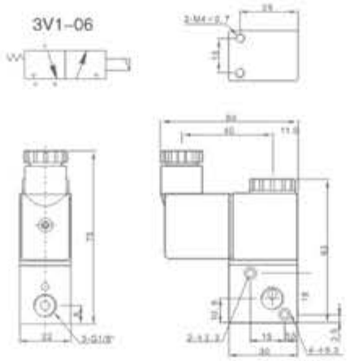

Overall Dimensions

3V1-06-3F

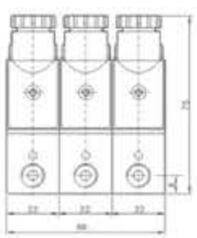

3V1-06B-3F

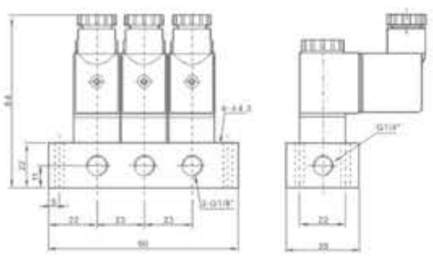

3V1-06B

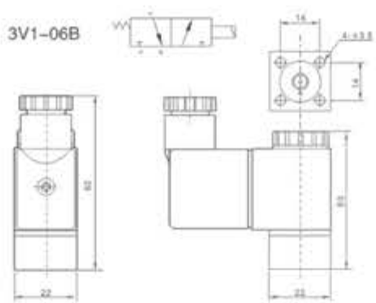

Base For 4V、4A Series Valve

Ordering Code

4V – 100M – □F

Series Code
4V:For 4V Series ues
4A:For 4A Series ues

Specification Code
100M:Base for 100 Series Use
200M:Base for 200 Series Use
300M:Base for 300 Series Use
400M:Base for 400 Series Use

Joint Base Number
100M:Wantonly Joint
200M:Wantonly Joint
300M:Wantonly Joint
400M:Wantonly Joint

Overall Dimensions

4A Series

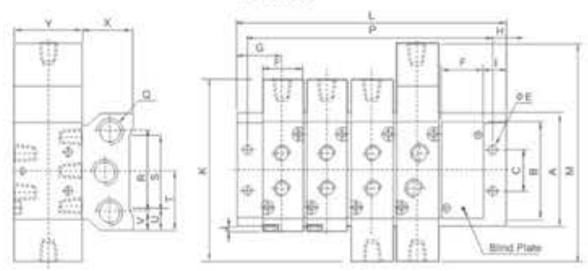

4V Series

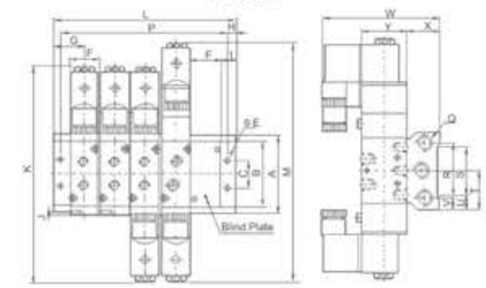

Dimension Sheet(4A Series)

Model	A	B	C	E	F	G	H	I	J	K	L 1F	2F	3F	4F	5F	6F	7F	8F	9F	10F	11F	12F	13F	14F	15F	16F
100M-□ F	58	43.2	20	4.5	18.3	19	5	10	0.8	139.4	38	57	76	95	114	133	152	171	190	209	228	247	266	285	304	323
200M-□ F	61	50.7	21	4.5	22.4	23	6	12	1.2	170	46	69	92	115	138	161	184	207	230	253	276	299	322	345	368	391
300M-□ F	75	64.8	26	4.5	27.3	27	6	13.5	2.5	188.8	54	82	110	138	166	194	22	250	278	306	334	362	-	-	-	-
400M-□ F	104	94.5	32	5.5	34.3	31.5	7	14.5	5	221.8	63	98	133	168	203	238	273	-	-	-	-	-	-	-	-	-

Model	M	P 1F	2F	3F	4F	5F	6F	7F	8F	9F	10F	11F	12F	13F	14F	15F	16F	Q	R	S	T	U	V	W	X	Y
100M-□ F	154.5	28	47	66	85	104	123	142	161	180	199	218	237	256	275	294	313	G1/4"	40	30	29	14	9	79	25	27
200M-□ F	189	34	57	80	103	126	149	172	195	218	241	264	287	310	333	256	379	G1/4"	43	32	30.5	14.5	9	93	26	35
300M-□ F	208	42	70	98	126	154	182	210	238	266	294	322	350	-	-	-	-	G3/8"	53	48	37.5	13.5	11	99.5	30	40
400M-□ F	243	49	84	119	154	189	224	259	-	-	-	-	-	-	-	-	-	G1/2"	68	67	52	18.5	18	112.5	38	50

Dimension Sheet(4V Series)

Model	A	B	C	E	F	G	H	I	J	K	L 1F	2F	3F	4F	5F	6F	7F	8F	9F	10F	11F	12F	13F	14F	15F	16F
100M-□ F	58	43.2	20	4.5	18.3	19	5	10	0.8	81	38	57	76	95	114	133	152	171	190	209	228	247	266	285	304	323
200M-□ F	61	50.7	21	4.5	22.4	23	6	12	1.2	92	46	69	92	115	138	161	184	207	230	253	276	299	322	345	368	391
300M-□ F	75	64.8	26	4.5	27.3	27	6	13.5	2.5	111	54	82	110	138	166	194	22	250	278	306	334	362	-	-	-	-
400M-□ F	104	94.5	32	5.5	34.3	31.5	7	14.5	5	142	71	98	133	168	203	238	273	-	-	-	-	-	-	-	-	-

Model	M	P 1F	2F	3F	4F	5F	6F	7F	8F	9F	10F	11F	12F	13F	14F	15F	16F	Q	R	S	T	U	V	X	Y
100M-□ F	96	28	47	66	85	104	123	142	161	180	199	218	237	256	275	294	313	G1/4"	40	30	29	14	9	25	27
200M-□ F	111	34	57	80	103	126	149	172	195	218	241	264	287	310	333	256	379	G1/4"	43	32	30.5	14.5	9	26	35
300M-□ F	130	42	70	98	126	154	182	210	238	266	294	322	350	-	-	-	-	G3/8"	53	48	37.5	13.5	11	30	40
400M-□ F	163	49	84	119	154	189	224	259	-	-	-	-	-	-	-	-	-	G1/2"	68	67	52	18.5	18	38	50

MSV Series Mechanical Valve

MSV86522-EB | MSV86522-PB | MSV86522-TB | MSV86522-LB | MSV86522-PP | MSV86522-PPL | MSV86522-R

Ordering Code

MSV 98 32 1 R

Specification Code
Mechanical Valve

Series Code
98 Series
86 Series

Position and Way No
32:Two-position Three-way
52:Two-position Five-way

Port Size
1:G1/8"
2:G1/4"

Button Type
Blank:Normal Type
R: Roller Type
TB:Selective Knob
LB:Strengthened Knob
PB:Large Round Button
PP:Plat Round Button
PPL:Convex Round Button
EB:With Lock Button

Specifcation

Model	MSV86321	MSV86522	MSV98322
Working Medium	40 Micron Filtered Air		
Position and Way No.	Two-position Three-way	Two-position Five-way	Two position Three-way
Effective Section Area	12mm² (CV=0.67)	16mm²(CV=0.89)	16mm²(CV=0.89)
Port Size	G1/8"	G1/4"	G1/4"
Pressure Range	0~0.8Mpa		
Temperature Range	0~60℃		

Overall Dimensions

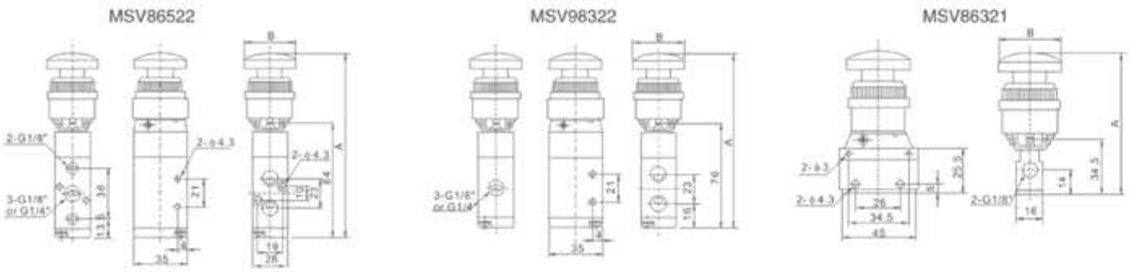

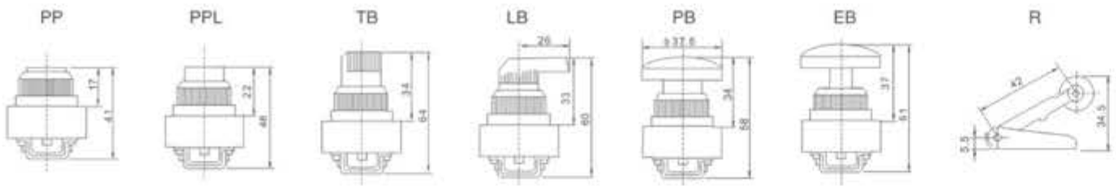

Dimension Sheet

Series	Symbol/Model	PP	PPL	LB	TB	EB	PB	R
MSV86522	A	114	119	133	136.5	134	131	107.5
	B	39.5	24.5	26.5	36.5	39.5	37.5	42.5
MSV98322	A	106	111	125	129.5	126	123	99.5
	B	39.5	24.5	26.5	36.5	39.5	37.5	42.5
MSV86321	A	66	71	85	88.5	86	83	59.5
	B	39.5	24.5	26.5	36.5	39.5	37.5	42.5

JMJ Series Mechanical Valve

JMJ-01 | JMJ-02 | JMJ-03 | JMJ-04 | JMJ-05 | JMJ-06 | JMJ-07

Ordering Code

JMJ — 01

Specification Code
Joint Pipe Bore G1/4"Two-position Three-way Mechanical Valve

Button Type
01:Selective Knob
02:Strengthened Knob
03:With Lock Button
04:Large Round Button
05:Plat Round Button
06:Convex Round Button
07:With Lock Button

Specifcation

Model	JMJ-01、02、03、04、05、06、07
Port Size	G1/4"
Working Medium	Air
Temperature Range	0~60℃
Pressure Range	0~1MPa
Effective Section Area	25mm²
Lubrication	Not Necessary

Overall Dimensions

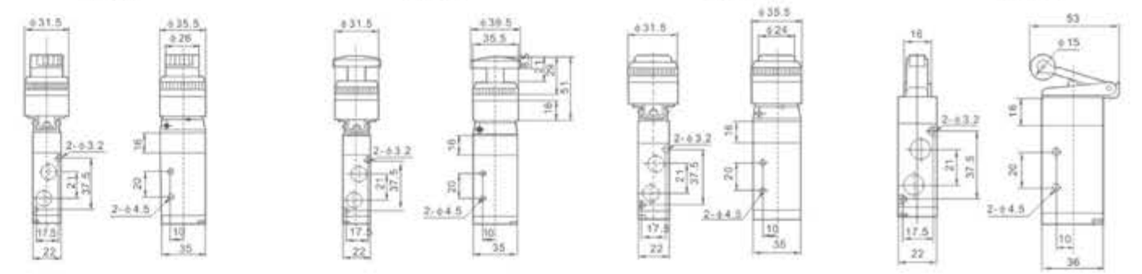

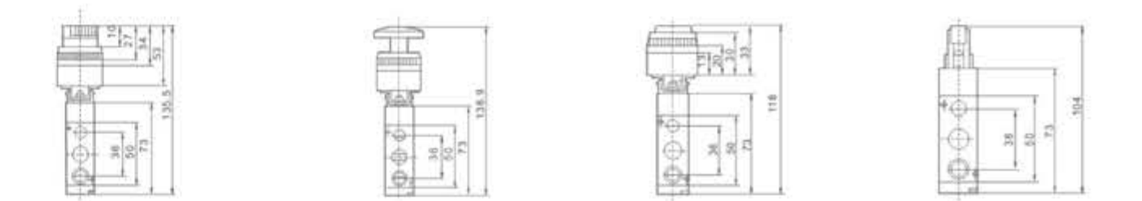

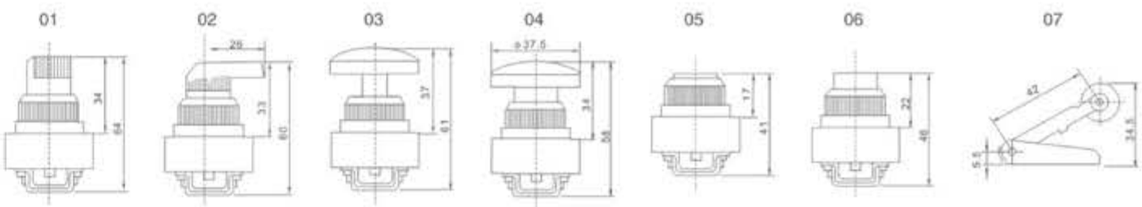

JM Series Mechanical Valve

JM-05 JM-06 JM-06A JM-07

Ordering Code

JM — **05**

Specification Code
Stop-type Mechanical Valve

Button Type
05:Selective Knob
06:With Lock Button
06A:Plat Round Button
07:Roller Type

Specifcation

Model	JM-05	JM-06	JM-06A	JM-07
Working Medium	40 Micron Filtered Air			
Position and Way No.	Two-position Three-way,Two-position Two-way			
Port Size	G1/4"			
Working-pressure Range	0~0.8MPa			
Operating Temperature	0~60°C			

Dimension Sheet

Model	JM-05	JM-06	JM-06A	JM-07
A	114	111	96	84.5
B	36.5	39.5	39.5	42.5

Overall Dimensions

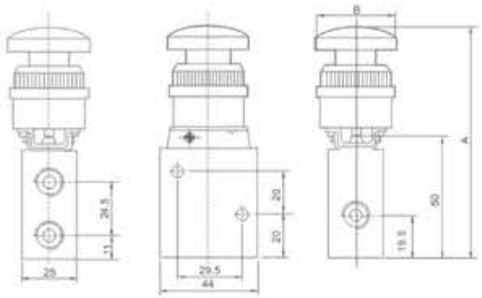

MOV Series Mechanical Valve

MOV-01 MOV-02 MOV-03 MOV-04

Ordering Code

MOV — **01**

Specification Code
Machine-Control,
Hand-Control Valve

Button Type
01:Selective Knob
02:Roller Type
03:With Lock Button
04:Plat Round Button

Specifcation

Model	MOV-01	MOV-02	MOV-03	MOV-04
Working Medium	Air			
Position and Way No.	Two-position Two-way			
Port Size	G1/8"			
Working-pressure Range	0~0.8MPa			
Operating Temperature	0~70°C			

Overall Dimensions

MOV-02

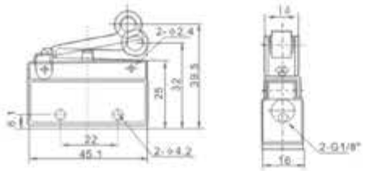

MOV-01

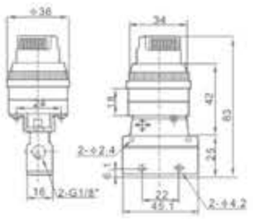

MOV-03

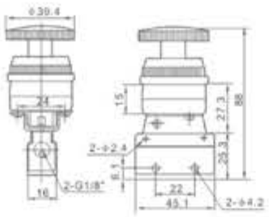

MOV-04

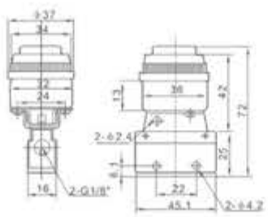

4R Series Hand-draw Valve

4R110-06 4R210-08 3R210-08

Ordering Code

4R **2** **10** **06**

Specification Code
4R:Two-position Five-way Hand-draw Valve
3R:Two-position Three-way Hand-draw Valve

Series Code
100 Series
200 Series
300 Series
400 Series

Number of Places
10:Single-head Double-position

Port Size
06:G1/8"
08:G1/4"
10:G3/8"
15:G1/2"

Specifcation

Model	4R110-06	4R210-08	4R310-10	4R410-15	3R110-06	3R210-08	3R310-10	3R410-15
Working Medium	Compresse Air							
Position and Way No.	Two-position Five-way				Two-position Three-way			
Joint Pipe Bore	G1/8"	G1/4"	G3/8"	G1/2"	G1/8"	G1/4"	G3/8"	G1/2"
Working-pressure Range	0~1.0MPa							
Operating Temperature Range	-5~60°C							
Operating Method	Direct Action Type							
Lubrication	Not Required							

Overall Dimensions

4R210-08

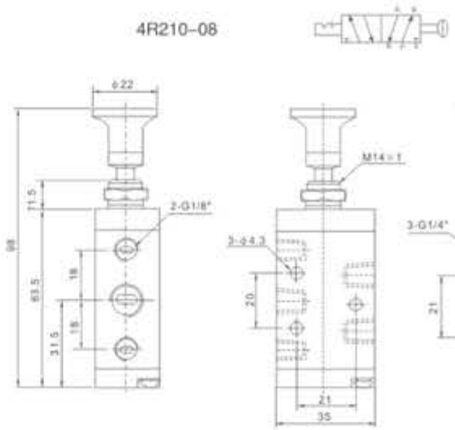

3R210-08

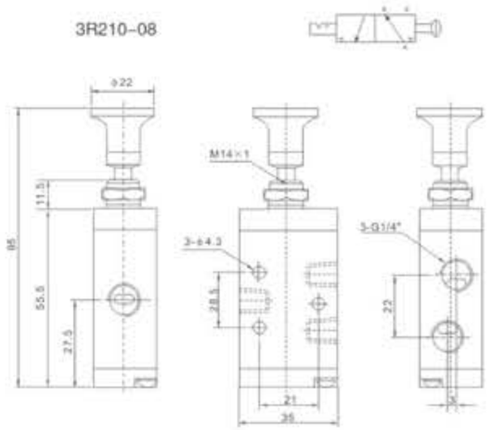

HV,K34 Series Hand-switching Valve

HV-03

K34R-08

K34-R-L8D

K34-R-L6D

Ordering Code

HV	—	02	□	K	34	—	R_4	L8	D
Series Code HV Series		**Port Size** 02:G1/4" 03:G3/8" 04:G1/2"	**Joint Pipe Type** Blank:Pipe Connection Type B:Plate Connection Type	**Series Code** K Series	**Position and way No.** 24:Two-position Four-way 34:Three-position Four-way		**Type Code** R_4:Hand-switching Valve	**Port Size** L6:G1/8" L8:G1/4"	**Base Joint**

Specifcation

Model	HV-02	HV-03	HV-04	$K34R_4$-L6	$K34R_4$-L8
Working Medium	40 Micron Filtered Air				
Effective Sectional Atea	30mm²(cv+1.68)			18mm²(cv+1.00)	
Port Size	G1/4"	G3/8"	G1/2"	G1/8"	G1/4"
Working-pressure Range	0~0.8MPa				
Operating Temperature Range	0~60℃				

Overall Dimensions

HV

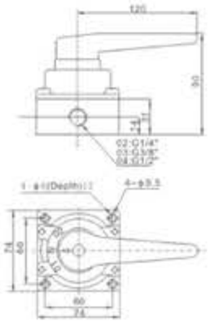

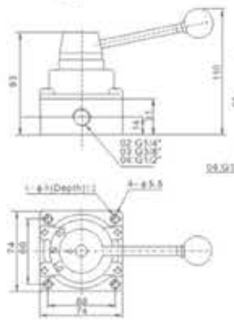

K34R-08

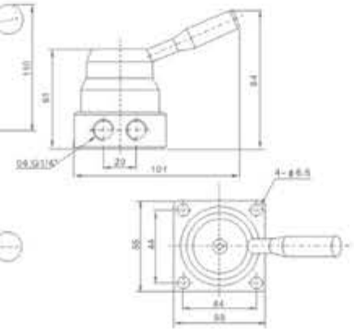

4HV Series Hand-switching Valve

Ordering Code

4HV	230	—	08	—	T
Series Code 4HV Series	**Positiom and way No** 230: Three-position Four-way 330: Three-position Four-way		**Port Size** 08: G1/4" 10: G3/8" 15: G1/2"		**Install Type** Blank: Body of Valve Install T: Panel Install

TSV Series Hand-pull Valve

TSV86522-M

TSV98322-M

Ordering Code

TSV86	52	2	—	M	TSV98	32	2	—	M
Specification Code Hand-pull Valve	**Position and Way NO.** Two-position Five-way	**Port Size** 1:G1/8" 2:G1/4"		**Type Code** M:Machinery Locking Type S:Spring Return Type	**Specification Code** Hand-pull Valve	**Position and Way NO.** Two-position Three-way	**Port Size** 1:G1/8" 2:G1/4"		**Type Code** M:Machinery Locking Type S:Spring Return Type

Specifcation

Model	TSV86522M/S	TSV98322M/S
Working Medium	40 Micron Filtered Air	
Motion Pattern	Direct Drive Type	
Effective Sectional Area	18mm²(CV=1.00)	
Port Size	G1/4	
Working-pressure Range	0~1.0MPa	
Operating Temperature Range	0~60℃	

Overall Dimensions

TSV86522

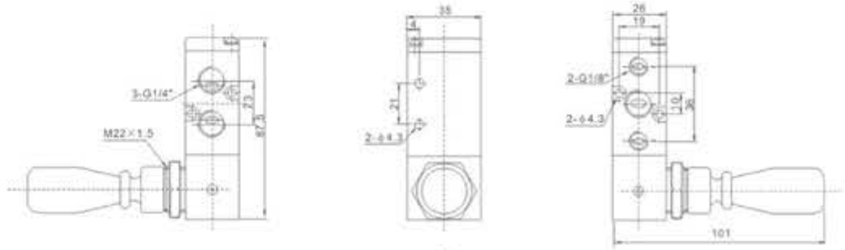

TSV98322

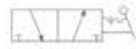

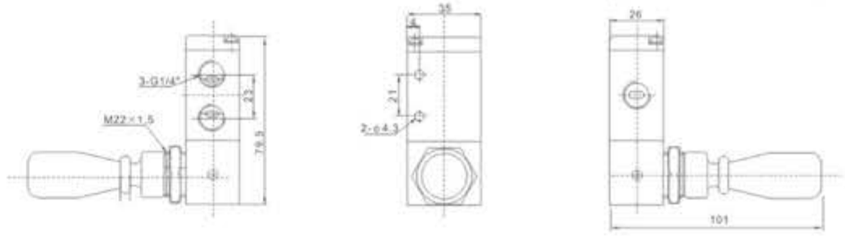

4H Series Hand-pull Valve

4H330-10

4H210-06

Ordering Code

4H	2	10	—	06	—	□
Specification Code	Positiom and way No	Number of places		Port Size		Type Code

Specification Code
4H:Two(Three)-position Five-way Hand Pull Valve

Positiom and way No
2:200 Series
3:300 Series
4:400 Series

Number of places
10:Single-head Double-position
30:Single-head Three-position

Port Size
06:G1/8"
08:G1/4"
10:G3/8"
15:G1/2"

Type Code
Blank:Two-Position Five-way lock tpye
L:Three-Position Five-way lock tpye
S:Two(Three)- Position Five-way spring return type

Specifcation

Model	4H210-06	4H210-08	4H230-08	4H310-08	4H310-10	4H330-10	4H410-15	4H430-15
Working Medium	40 Micron Filtered Air							
Motion Pattern	Direct Drive Type							
Effective Section Area	14mm²(CV=0.78)	16mm²(CV=0.89)	12mm²(CV=0.67)	25mm²(CV=1.4)	30mm²(CV=1.68)	30mm²(CV=1.68)	50mm²(CV=2.79)	50mm²(CV=2.79)
Port Size	Air Inlet=Air Outlet= Exhaust=G1/8"	Air Inlet=Air Outlet= Exhaust=G1/4"		Air Inlet=Air Outlet= Exhaust=G1/4"	Air Inlet=Air Outlet= G3/8" Exhaust=G1/4"		Air Inlet=Air Outlet= Exhaust=G1/2"	
Working-Pressure Range	0~1.0MPa							
Operating Temperature Range	0~60℃							

Overall Dimensions

4H Series

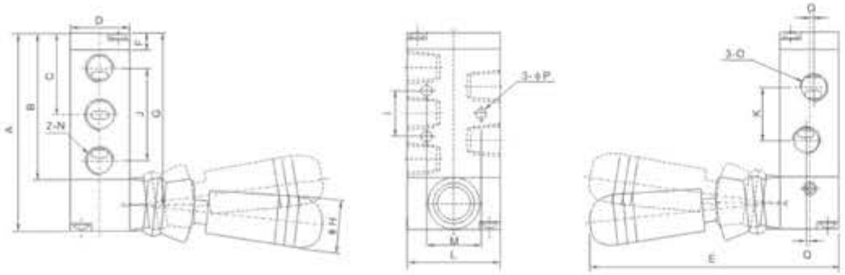

Dimension Sheet

Symbol/Model	A	B	C	D	E	F	G	H	I	J	K	L	M	N	O	P	Q
4H210-06	76.5	56.5	31.5	22	95	6.5	66.5	18	20	36	21	35	21	G1/8"	G1/8"	4.3	-
4H230-06	76.5	56.5	31.5	22	95	6.5	66.5	18	20	36	21	35	21	G1/8"	G1/8"	4.3	-
4H230-06(S)	97.5	75.5	31.5	22	95	6.5	85.5	18	20	36	21	35	21	G1/8"	G1/8"	4.3	-
4H210-08	76.6	56.5	31.5	22	95	6.5	66.5	18	20	36	21	35	21	G1/8"	G1/4"	4.3	1.5
4H230-08L	97.5	75.5	31.5	22	95	6.5	66.5	18	20	36	21	35	21	G1/8"	G1/4"	4.3	1.5
4H230-08(S)	97.5	75.5	31.5	22	95	6.5	85.5	18	20	36	21	35	21	G1/8"	G1/4"	4.3	1.5
4H310-08	92	72.5	40	27	100	7.5	82.5	18	24	45	24	40	27	G1/4"	G1/4"	4.3	-
4H310-10	92	72.5	40	27	100	7.5	52.5	18	24	45	24	40	27	G1/4"	G3/8"	4.3	2
4H410-15	126	102	55.5	34	100	7.5	114	18	28	63	36	50	35	G1/2"	G1/2"	5.5	-

4F、FV Series Foot Valve

4F210-08L

4F210-08

FV420

4F210-08LG

Ordering Code

4F	2	10	—	08	—	□	FV	—	320
Specification Code	Series Code	Number of Places		Port Size		Type Code	Specification Code		Position and way No

Specification Code
4F:Two-position Five-way Foot Valve

Series Code
2:200 Series

Number of Places
10:Single-head Double-position

Port Size
08:G1/4"

Type Code
Blank:Standard Type
L:With Lock
G:With Cover
LG:With Lock And Cover

Specification Code
FV:Foot Valve

Position and way No
320:Two-position Three-way
420:Two-position Four-way

Specifcation

Model	4F210-06	4F210-08L	4F210-08G	4F210-08LG	FV420	FV320
Working Medium	40 Micron Filtered Air					
Position and Way Number	Two-position Five-way				Two-position Four-way	Two-position Three-way
Motion Patten	Direct Drive Type					
Port Size	Air Inlet=Air Outlet=Exhaust=G1/4"				Air Inlet=Air Outlet=G1/4" Exhaust=G1/8"	
Working-pressure Range	0.15~0.9MPa					
Operating Temperature Range	0~60℃					

Overall Dimensions

4F210-08

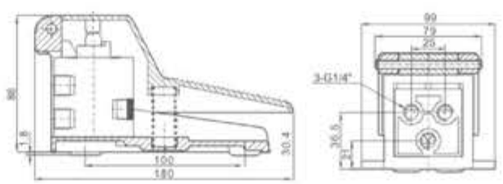

4F210-08L

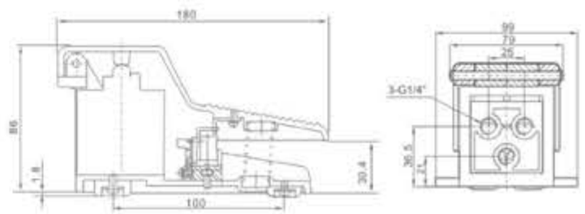

4F、FV Series Foot Valve

Overall Dimensions

4F210-08G

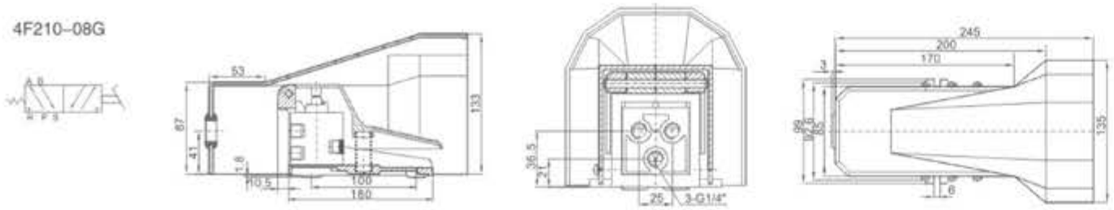

4F210-08LG

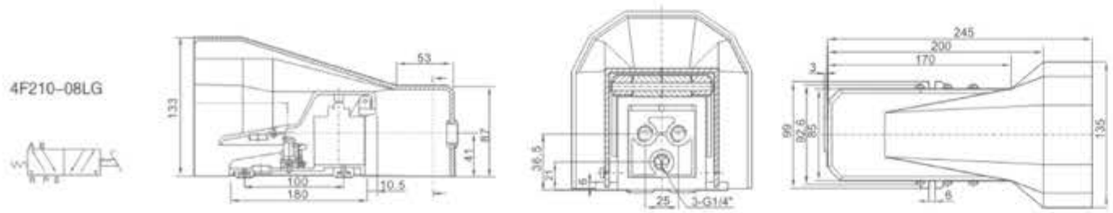

FV420

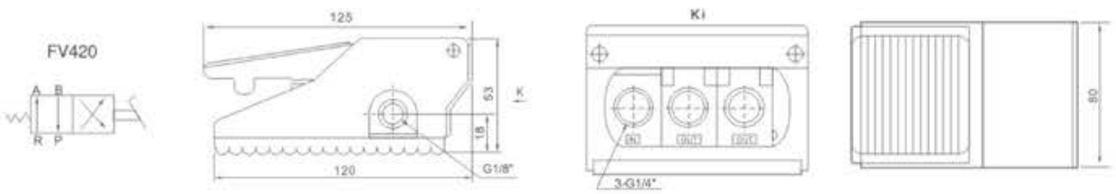

FV320

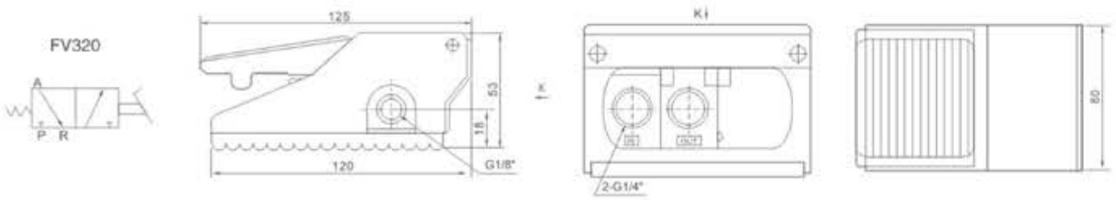

RE Series Flow Control Valve

Ordering Code

RE — 01

Series Code
RE:Ordinary Type
Flow Control Valve

Port Size
01:G1/8"
02:G1/4"
03:G3/8"
04:G1/2"

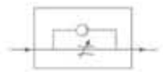

Graphic Symbol

Specifcation

Model	RE-01	RE-02	RE-03	RE-04
Port Size	G1/8"	G1/4"	G3/8"	G1/2"
Working Medium	Air			
Working-pressure Range	0~0.95MPa			
Operating Temperature Range	0~60℃			

Overall Dimensions

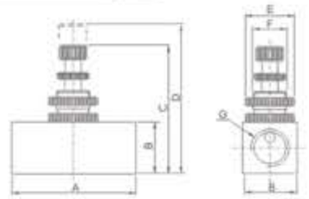

Dimension Sheet

Model	A	B	C	D	E	F	G
RE-01	45	19	43	50	Φ19	M14×1	G1/8
RE-02	45	19	43	50	Φ19	M14×1	G1/4
RE-03	55	25	55	62	Φ25	M18×1	G3/8
RE-04	55	25	55	62	Φ25	M18×1	G1/2

ASC Series Check Valve

Ordering Code

ASC — 08

Series Code
ASC:Accurate Type
Flow Control Valve

Port Size
06:G1/8"
08:G1/4"
10:G3/8"
15:G1/2"

Graphic Symbol

Specifcation

Model	ASC-06	ASC-08	ASC-10	ASC-15
Port Size	G1/8"	G1/4"	G3/8"	G1/2"
Working Medium	Air			
Working-pressure Range	0~0.95MPa			
Operating Temperature Range	0~60℃			

Overall Dimensions

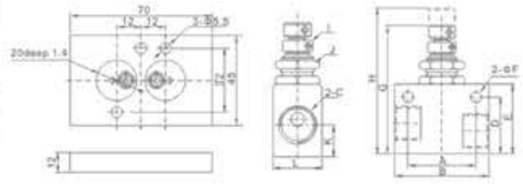

Dimension Sheet

Model	A	B	C	D	E	F	G	H	I	J	K	L
ASC-06	22	32	G1/8	22	27	4.3	49.7	56.5	M6×0.5	M12×0.75	12	18
ASC-08	26	36	G1/4	22	27	4.3	49.7	56.5	M6×0.5	M12×0.75	12	18
ASC-10	28	40	G3/8	25	30	4.3	52.7	59.5	M6×0.5	M12×0.75	13	22
ASC-15	28	40	G1/2	30	35	4.3	58.7	65.5	M6×0.5	M12×0.75	13.5	26

KAM Series Check Valve

Ordering Code

KAM — 15

Series Code
KAM: Check Valve

Port Size
06:G1/8"
08:G1/4"
10:G3/8"
15:G1/2"

Specifcation

Model	KAM-06	KAM-08	KAM-10	KAM-15
Port Size	G1/8"	G1/4"	G3/8"	G1/2"
Flow mm^3/S	10	20	40	60
Leak Out Flow(cm^2/min)	≤45	≤60	≤80	≤95
Operation Medium	Compressed Air			
Working Temperature Range	-5~60℃			
Working Pressure	0.05~1.2MPa			

Overall Dimensions

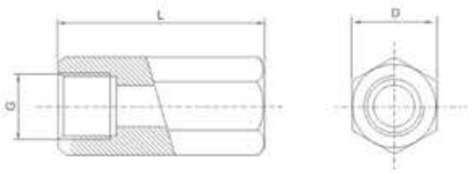

Dimension Sheet

Model	D	G	L
KAM-06	G1/8"	37	14
KAM-08	G1/4"	48	17
KAM-10	G3/8"	50	21
KAM-15	G1/2"	60	24

XQ Series Quick Exhaust Valve

The valve is generally installed on the pipeline between the cylinder and reversal valve and near the cylinder, which directly discharge the air from cylinder without passing the reversal valve and thusto achieve the goal of fast reversion of cylinder.The effect on improving cylinder speed is especially obvious.
P: Connect reversal valve export
A: Connect cylinder
R: Connect muffler

Ordering Code

XQ — 170800

Series Code
XQ:Quick Exhaust Valve

Port Size
170600:G1/8"
170800:G1/4"
171000:G3/8"
171500:G1/2"
172000:G3/4"

Graphic Symbol

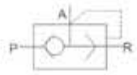

Specifcation

Model	XQ170600	XQ170800	XQ171000	XQ171500
Joint Threaded	G1/8"	G1/4"	G3/8"	G1/2"
Port Size	6mm	6mm	8mm	15mm
Flow	≥0.9m^3/min	≥0.9m^3/min	≥2.5m^3/min	≥4.5m^3/min
Timerate(Ten Thousand Times)	≤200			
Working Pressure Range	0.12~1.0MPa			
Exchange Times(S)	≤0.03	≤0.03	≤0.04	≤0.05

Overall Dimensions

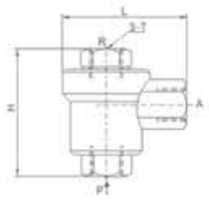

Dimension Sheet

Model	T	H	L
XQ170600	G1/8"	39	32
XQ170800	G1/4"	51	45
XQ171000	G3/8"	68	62
XQ171500	G1/2"	77	86

AS Series Check Valve

Ordering Code

AS — 4000 — 02

Series Code
AS:Check Valve

Specification Code
4000

Port Size
02:G1/4"
03:G3/8"
04:G1/2"

Graphic Symbol

Specifcation

Model		AS4000-02	AS4000-03	AS4000-04
Port Size		G1/4"	G3/8"	G1/2"
Free Flow	Flow(L/min)	1670		
	Effective Sectional Area(mm^2)	25.5		
Controlled Flow	Flow(L/min)	1670		
	Effective Sectional Area(mm^2)	25.5		
Ensured Pressure Resistance		1.5MPa		
Highest Working Pressure		1.0MPa		
Lowest Working Pressure		0.05MPa		
Ambient and Media Temperature		5~60℃		
Regulated Flow Turns		8~9		

Note*:Input pressure is 0.5MPa.
Note*:8 turns for AS4000

Overall Dimensions

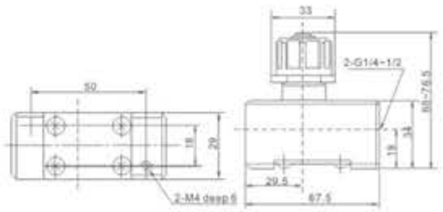

AS4000

QE Series Quick Exhaust Valve

Ordering Code

QE — 01

Series Code
QE:Quick Exhaust Valve

Port Size
01:G1/8" 02:G1/4"
03:G3/8" 04:G1/2"
06:G3/4"

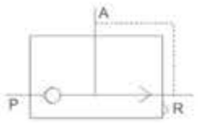

Graphic Symbol

Specifcation

Model	QE-01	QE-02	QE-03	QE-04	QE-06
Port Size	G1/8"	G1/4"	G3/8"	G1/2"	G3/4"
Effective Section Area	16mm^2	27.5mm^2	38mm^2	71mm^2	72.5mm^2
Working Medium	Air				
Working Pressure Range	0~1.0MPa				
Operating Temperature Range	0~60℃				

Overall Dimensions

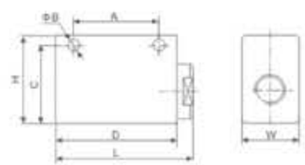

Dimension Sheet

Model	Bore	L	W	H	A	B	C	D
QE-01	G1/8"	46	20	32	30	4.3	27	40
QE-02	G1/4"	62	25	40	39	5.6	33.5	55
QE-03	G3/8"	62	25	40	39	5.6	33.5	55
QE-04	G1/2"	98	38	64	60	8.5	51	90
QE-06	G3/4"	98	38	64	60	8.5	51	90

XKP Series Quick Exhaust Valve

Ordering Code

XKP — **L15**

Series Code
XKP:Quick Exhaust Valve

Port Size
L6:G1/8"
L8:G1/4"
L10:G3/8"
L15:G1/2"
L20:G3/4"
L25:G1"
L32:G1-1/4"
L40:G1-1/2"
L50:G2"

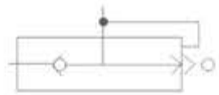

Graphic Symbol

Specifcation

Model		XKP-L6	XKP-L8	XKP-L10	XKP-L15	XKP-L20	XKP-L25	XKP-L32	XKP-L40	XKP-L50
Section Area	P→A	10	20	40	60	110	190	300	400	650
	A→□	20	40	60	110	190	300	400	650	900
Leak Out Flow(cm^3/min)		≤10		≤25		≤50			≤70	
Working Medium		Compressed Air								
Operating Temperature Range		-5~+60℃								
Working-pressure		0.05~1.2MPa								

Overall Dimensions

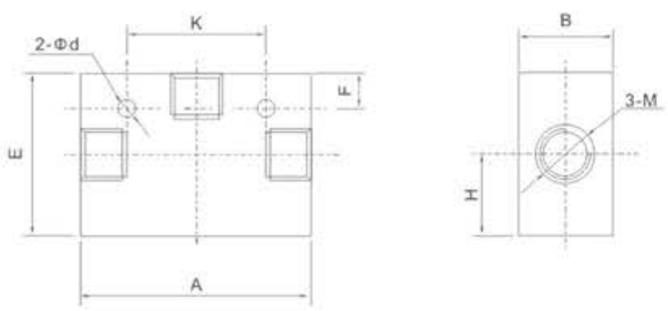

Dimension Sheet

Model	M	A	K	B	E	H	F	d
XKP-L6	G1/8	75	-	36	41	10	-	-
XKP-L8	G1/4							
XKP-L10	G3/8	82	58	44	60	23	8	7
XKP-L15	G1/2							
XKP-L20	G3/4	128	98	72	95	36	8	10
XKP-L25	G1							
XKP-L32	G1 1/4	158	126	88	112	44	10	10
XKP-L40	G1 1/2							
XKP-L50	G2	190	148	102	130	52	10	12

ST Series Shuttle Valve

Ordering Code

ST — **01**

Series Code
ST:Shuttle Valve

Port Size
01:G1/8"
02:G1/4"
03:G3/8"
04:G1/2"
06:G3/4"
08:G1"

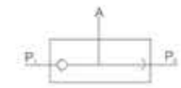

Graphic Symbol

Specifcation

Model	ST-01	ST-02	ST-03	ST-04	ST-06	ST-08
Working Medium	Air					
Effective Section Area	7.5mm^2	21mm^2	40mm^2	60mm^2	110mm^2	190mm^2
Port Size	G1/8"	G1/4"	G3/8"	G1/2"	G3/4"	G1"
Working Pressure Range	0~1.0MPa					
Operating Temperature Range	-5~60℃					

Overall Dimensions

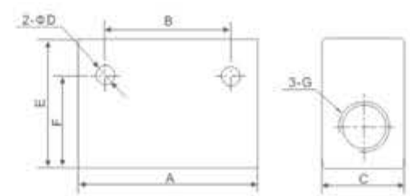

Dimension Sheet

Model	A	B	C	D	E	F	G
ST-01	40	24	16	4.5	25	20.5	G1/8"
ST-02	50	35	22	5.5	35	25	G1/4"
ST-03	75	48	30	7	50	42	G3/8"
ST-04	75	48	30	7	50	42	G1/2"
ST-06	110	72	40	7	70	58	G3/4"
ST-08	110	72	40	7	70	58	G1"

CV Series Vacuum Valve

Ordering Code

CV — **15L**

Series Code
CV:Vacuum Valve

Port Size
10L:G1/8"
15L:G1/4"
20L:G3/8"

Specifcation

Model	CV-10L	CV-15L	CV-20L
Working Medium	Air		
Working pressure	1.0MPa		
Shortest Excitation Time	0.05 Second		
Leakage Volume	≤10cm^3/min		

Overall Dimensions

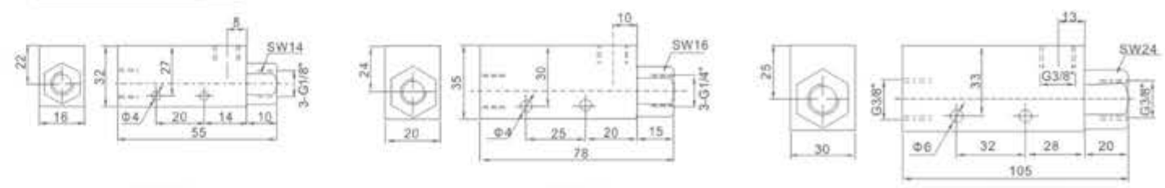

CV-10L CV-15L CV-20L

2V Series 2/2 Solenoid Valve

Ordering Code

2V	025	06	—	AC220V	—	V
Specification Code	**Aperture of Flow Rate**	**Port Size**		**Standard Voltage**		**Oil Seal Code**
2V:Two-position Two-way Solenoid Valve	025:2.5mm 130:13mm 250:25mm	06:G1/8" 08:G1/4" 10:G3/8" 15:G1/2" 20:G3/4" 25:G1"		DC12V DC24V AC24V 50Hz/60Hz AC110V 50Hz/60Hz AC220V 50Hz/60Hz AC380V 50Hz/60Hz		Blank:NBR V:VITON(For High temperature)

Graphic Symbol

Specifcation

Model	2V025-06	2V025-08	2V130-10	2V130-15	2V250-20	2V250-25
Working Medium	Air,Water,Oil					
Motion Pattern	Direct Drive Type		Guide Type			
Type	Normal Close Type					
Aperture of Flow Rate(mm)	2.5		13		25	
CV Value	0.23		6.2		23	
Port Size	G1/8"	G1/4"	G3/8"	G1/2"	G3/4"	G1"
Operation Fluid Viscosity	20 CST (Below)					
Working-pressure	Air,Water,Oil 0~0.8MPa		Air,Water,Oil 0.05~0.7MPa			
Max. Pressure Resistance	12kgf/cm²		10.5kgf/cm²			
Operating Temperature Range	-10~+80℃					
Voltage Range	±10%					
Protect Class	IP65					
Power Consumption	AC:7VA860Hz PC:6W					
Insulation	F Class					
Material of Body	Aluminum or Brass		Brass			
Material of Oil Seal	NBR or VITON		NBR			
Shortest Excitation Time	0.05 Second					

Internal structure

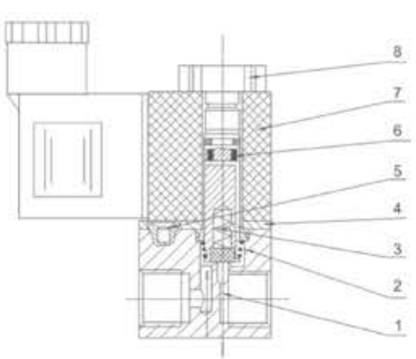

NO	Name
1	Body Of Valve
2	Spring
3	Assembly Of Iron Core
4	Assembly Of Iron Core
5	Cruciform Slot Screw
6	Platen
7	Coil
8	Nut

2V Series 2/2 Solenoid Valve

Internal structure

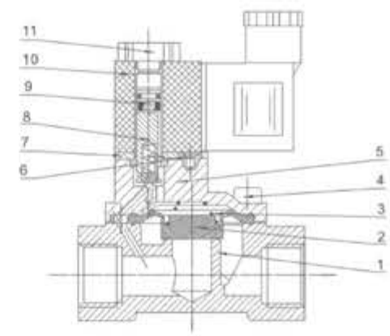

NO	Name
1	Body Of Valve
2	Diaphragm
3	Spring
4	Socket Hexagon Screws
5	Cover board
6	Cruciform Slot Screw
7	Platen
8	Assembly Of Iron Core
9	Assembly Of Iron Core
10	Coil
11	Nut

Overall Dimensions

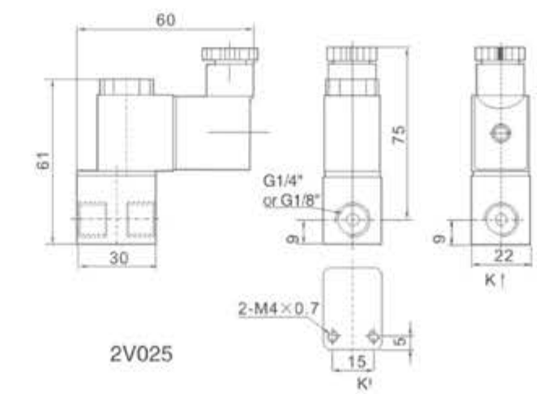

2V025

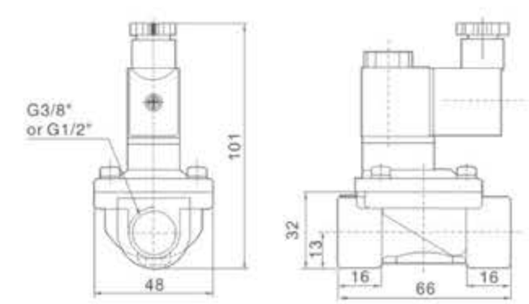

2V130

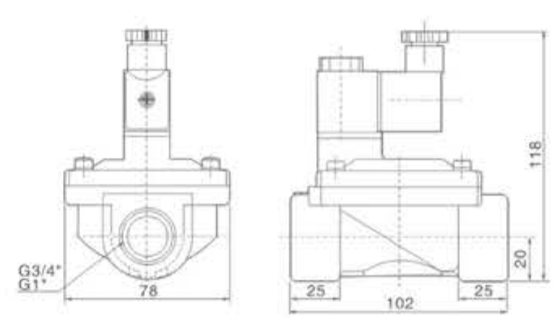

2V250

PU220 Series 2/2 Solenoid Valve(Direct drive type)

Graphic Symbol

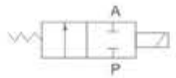

Ordering Code

PU	220	02	—	A	AC220V	—	T
Specification Code	**Motion Pattem**	**Port Size**		**Initial Estate**	**Standard Voltage**		**Wiring Form**
PU:Two -position Two -way solenoid valve	220:Direct drive Type	01:G1/8" 02:G1/4" 03:G3/8" 04:G1/2" 06:G3/4" 08:G1" 12:G1'/4" 14:G1'/2" 20:G2"		A: Large Flux AR: Small Aperture Direct Drive F: Flange Type	AC220V AC110V DC12V DC24V		Blank:Standard Coil T:Timer Coil

Specifcation

Model	PU220-01AR	PU220-02AR	PU220-03AR	PU220-03A	PU220-04AR	PU220-04A	PU220-06A	PU220-08A
Working Medium	Air, Water, Oil							
Motion Pattem	220:Direct Drive Type/225:Guide Type							
Type	Normal Close Type							
Aperture of Flow Rate(mm)	1.5	2.3	8	13	8	13	20	25
CV Value	0.10	0.18	1.00	4.00	1.00	4.00	8.60	11.00
Joint Pipe Bore	G1/8"	G1/4"	G3/8"	G3/8"	G1/2"	G1/2"	G3/4"	G1"
Operation Fluid Viscosity	50 CST							
Working-pressure	0~0.7MPa							
Max. Pressure Resistance	1.05MPa							
Operating Temperature Range	-5~+80℃							

Internal structure

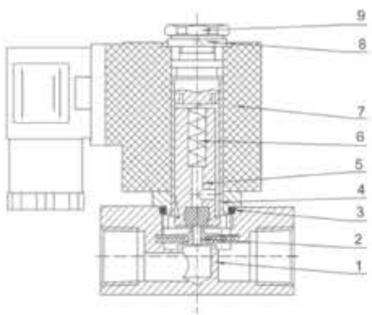

NO	Name
1	Body Of Valve
2	Assembly of Diaphragm
3	O-ring
4	Assembly Of Iron Core
5	Assembly Of Iron Core
6	Spring
7	Coil
8	Gasket
9	Nut

PU220 Series 2/2 Solenoid Valve(Direct drive type)

Internal structure

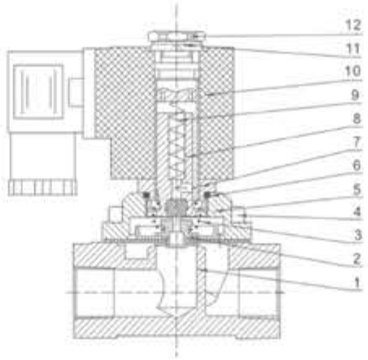

NO	Name	NO	Name
1	Body Of Valve	7	Assembly Of Iron Core
2	Assembly Of Diaphragm	8	Assembly Of Iron Core
3	Pull Spring	9	Spring
4	Socket Hexagon Screws	10	Coil
5	Valve Cover	11	Gasket
6	O-ring	12	Nut

Overall Dimensions

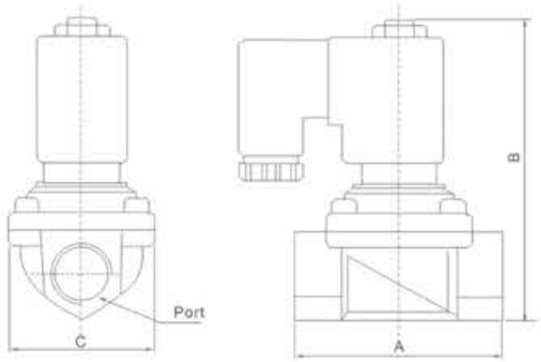

Dimension Sheet

Model	Port	A	B	C
PU220-01AR	G1/8"	22	72	22
PU220-02AR	G1/4"	35	72	25.4
PU220-03AR	G3/8"	55	79.5	30
PU220-03A	G3/8"	65.5	101	48
PU220-04A	G1/2"	65.5	101	48
PU220-06A	G3/4"	71	107	58
PU220-08A	G1"	97	120	70

XMFZ Series Right Angle Pulse Valve

Ordering Code

X	MF	Z	—	25	—	P	EX
XCPC Product	Pulse Valve	Type Code Z:Solenoid Control Q:Pneumatic Control		Orifice Size		Thead Type Blank:Normal Thread Type A:Thread Type+ Insert pipe P:Thread Type S:Double Diaphragms J:Thread Type (Economy Type)	Wiring Form Blank:Normal Type EX:Ex-proof type

Speciality

Adopt international advanced technology.
Used for dust remover.
Key parts all made of imported materials.
Pneumatic control type,solenoid control type,ex-proof solenoid control type for choose.
Female thread connection port,easy to be mounted.

Specifcation

Model	XMF-Z-20A	XMF-Z-20P	XMF-Z-20	XMF-Z-25	XMF-Z-25P	XMF-Z-35P	XMF-Z-40S	XMF-Z-50S	XMF-Z-62S	XMF-Z-76S	XMF-Z-100S
Working Pressure	0.3~0.8MPa										
Ambient Temperature	-5~55℃										
Relatively Humidity	<85%										
Working Medium	Clean Air										
Voltage	AC110V/AC220V/DC24V										
Diaphragm Life Cycles	Over 1000k Cycles										
Orifice(mm)	ϕ20	ϕ20	ϕ20	ϕ25	ϕ25	ϕ35	ϕ40	ϕ50	ϕ62	ϕ76	ϕ100
Connection Port	G3/4"	G3/4"	G3/4"	G1"	G1"	G1'/2"	G1'/2"	G2"	G2'/2"	G3"	ϕ100

Overall Dimensions

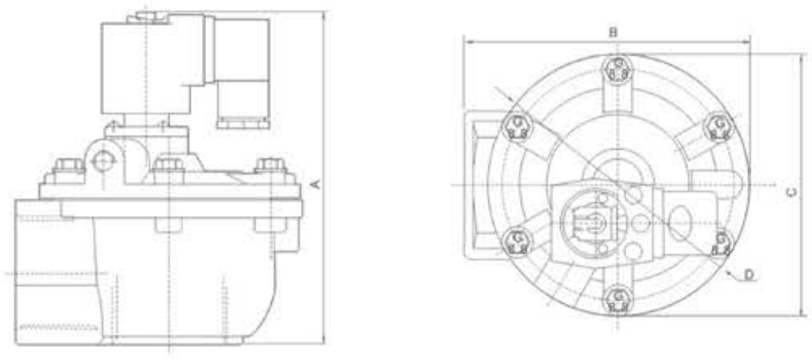

Dimension Sheet

Model	XMF-Z-20A	XMF-Z-20P	XMF-Z-20	XMF-Z-25	XMF-Z-25P	XMF-Z-35P	XMF-Z-40S	XMF-Z-50S	XMF-Z-62S	XMF-Z-76S	XMF-Z-100S
A	173	124	110	110	124	142	166	202	222	245	356.5
B	145	105	90.5	90.5	105	121	132	210	210	230.5	286.5
C	-	82.5	75	75	82.5	-	-	-	-	-	-
D	ϕ90	-	-	-	-	ϕ112	ϕ137	ϕ185	ϕ185	ϕ200	ϕ221

XMFY Series In Line Pulse Valve

Ordering Code

X	MF	—	Y	—	50	—	S	EX
XCPC Product	Pulse Jet Valve		Type Code Y:Solenoid Control Q:Pneumatic Control		Orifice		Double Diaphragms	Wiring Form Blank:Normal Type EX:Ex-proof Type

Speciality

Adopt international advanced technology
Used for dust remover
Key parts all made of imported materials
Pneumatic control type.solenoid control type.ex-proof solenoid control type for choose
Directing mounted to gas bag better blowing effect and small loss of air source.

Specifcation

Model	XMF-Y-50S	XMF-Y-62S	XMF-Y-76S
Working Pressure	0.3~0.8MPa		
Ambient Temperature	-5~55℃		
Relatively Humidity	<85%		
Working Med ium	Clean Air		
Voltage	AC110V/AC220V/DC24V		
Diaphragm Life Cycles	Over One Million Cycles		
Orifice(mm)	ϕ50	ϕ62	ϕ76
Connection Port	ϕ65	ϕ80	ϕ90

Overall Dimensions

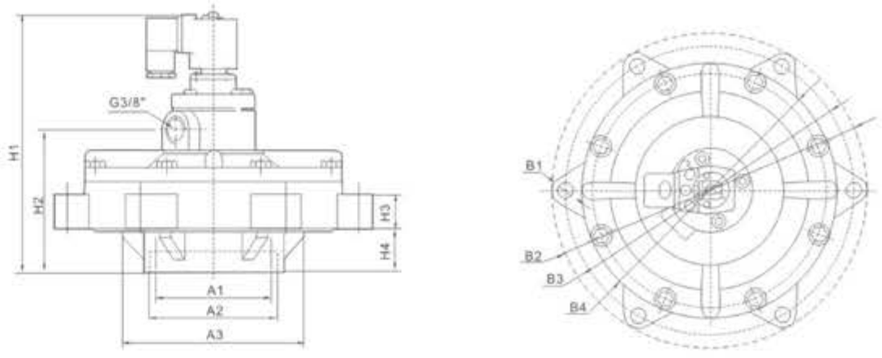

Dimension Sheet

Model	A1	A2	A3	B1	B2	B3	B4	H1	H2	H3	H4
XMF-Y-50S	ϕ64.5	ϕ78.5	ϕ118	6-ϕ11.5	ϕ200	ϕ180	ϕ159	187	100	25	31
XMF-Y-62S	ϕ80	ϕ93.5	ϕ145	6-ϕ11	ϕ226	ϕ204	ϕ185	197	107	34.5	35
XMF-Y-76S	ϕ90	ϕ99	ϕ141	6-ϕ11	ϕ248	ϕ227	ϕ200	205	113	27	34

XC Series Stainless Steel Bevel Valve

Ordering Code

XC	—	10	—	40	—	□	—	□
Serise Code		**Port Size**		**Actoator Size**		**Type**		**Body Material**
XC Series Stainless Steel Bevel Valve		10:G3/8" 15:G1/2" 20:G3/4" 25:G1" 32:G1-1/4" 40:G1-1/2" 50:G2" 65:G2-1/2" 80:G3"		40:40mm 50:50mm 63:63mm 90:90mm 100:100mm		SC:Single Action Normal Close SO:Single Action Normal Open DC:Double Action Normal Close DF:Double Action Free Installation		Blank:S.S 304 (Standard) 316:S.S 316 316L:S.S 316L

Specifcation

Model	XC10-80SC/SO/DC/DF
Port size	DN10-DN50
Thread	G3/8"-G3"
Welded	DIN11850 2 DIN11850 3 ISO2037
Valve body	CF8M
Actyator	CF8
Seat seals	PTFE
Stem seals	PTFE/FKM
Piston seals	FKM/NBR

Model	XC10-80SC/SO/DC/DF
Applicable medium	Water,liquid,neutral gas,water steam slight corrosive gas and liquid
Temperature range	PTFE:-10℃ to +180℃
Ambient temperature	-10℃ to +60℃
Viscosity	max. 600mm²/s
Installation	Any position
Controlling medium	Air or neutral gas
Controlling pressure range	0.3~1Mpa

Overall Dimensions

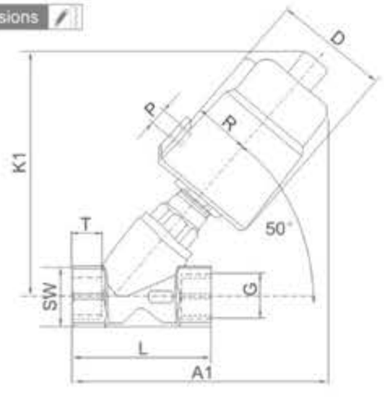

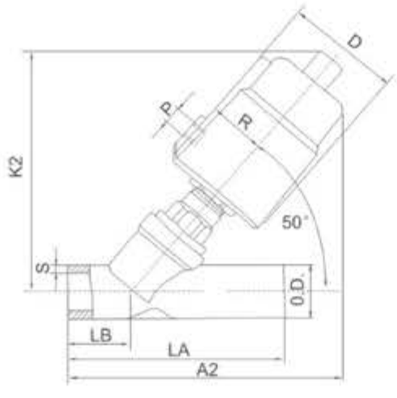

Dimension Sheet

Specification	Actuator (mm)	D	R	P	Thread						Welded					
					G	K1	A1	L	T	SW	OD	K2	A2	LA	LB	S
DN10	40	53	28	G1/8"	G3/8"	105	144	65	12	25	/	/	/	/	/	/
DN15	50	56	35	G1/8"	G1/2"	142	182	76	14	28	21	115	142	100	18	3
DN20	50	56	35	G1/8"	G3/4"	152	189	92	16	32	27	131	170	117	30	3
DN25	50	56	35	G1/8"	G1"	155	207	103	21	39	34	138	175	130	30	3
DN25	63	70	43	G1/8"	G1"	176	217	103	21	39	34	166	200	130	30	3
DN32	63	70	43	G1/8"	G1-1/4"	177	222	112	19	49	42	172	207	145	30	3
DN40	63	70	43	G1/8"	G1-1/2"	182	225	129	21	56	48	174	207	160	30	4
DN50	63	70	43	G1/8"	G2"	196	249	143	27	68	60	193	227	190	30	4
DN50	90	94	56	G1/4"	G2"	206	268	143	27	68	60	202	235	190	30	4
DN65	90	94	56	G1/4"	G2-1/2"	215	290	186	28	84	76	209	255	230	40	5
DN80	125	135	73	G1/4"	G3"	295	335	218	34	101	/	/	/	/	/	/

XQ22HD Series Right angle valve

Ordering Code

X	Q	22	HD	—	□	—	□	—	□
XCPC Product	**Right angle valve code**	**Two-position Two-way**	**Air control liquid valve**		**Connection Size**		**Type**		**Material**
					15:G1/2" 20:G3/4" 25:G1" 32:G1 1/4" 40:G1 1/2" 50:G2"		S:Single acting type D:Double acting type K:Normally open		Blank: Normal type H: High temperature type

Product Features

Classical design, durable Air control design, energy saving and environmental protection Big flow rate, safety and Precision

Can work at low pressure, smartness for on and off, good seal performance. There are two kinds of structure single acting type and double acting type.

Application: food, medicine, industry, abstersion, landification, printing, etc.

Remark: Normally open: Flow comes under the piston seal, against arrow on body.

Internal structure

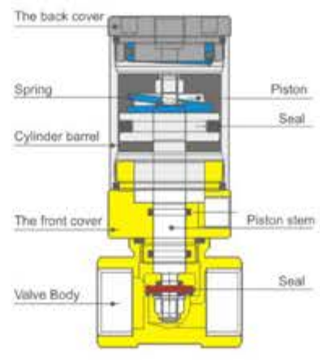

Specifcation

Model	Orifice	Medium	Working pressure	Temp range	Kv value(m³/k)
XQ22HD-15	15mm	Compress Air Water Oil	0.2~0.6MPa	-5-60℃ (High temperture) -5-150℃	4
XQ22HD-20	20mm				5
XQ22HD-25	25mm				10
XQ22HD-32	32mm				25
XQ22HD-40	40mm				25
XQ22HD-50	50mm				40

Overall Dimensions

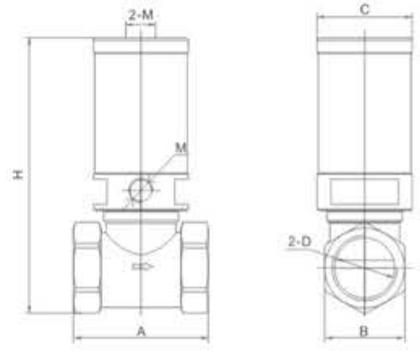

Dimension Sheet

Model	A	B	C	D	H	M
XQ22HD-15	47	26	31	G1/2"	96	G1/8"
XQ22HD-20	54	33	31	G3/4"	102	G1/8"
XQ22HD-25	66	34	38	G1"	115	G1/8"
XQ22HD-32	77	48	46	G1-1/4"	143	G1/8"
XQ22HD-40	86	54	56	G1-1/2"	160	G1/8"
XQ22HD-50	116	67	69	G2"	182	G1/8"

Pneumatic Tube Fittings

XPDJ

MODEL(ϕ D)	
Tube(Metric)	
XPDJ 04	XPDJ 08-06
XPDJ 06	XPDJ 10-08
XPDJ 08	XPDJ 12-10
XPDJ 10	
XPDJ 12	
XPDJ 06-04	

XPSJ

MODEL(ϕ D1- ϕ D2)	
Tube(Metric)	Tube(Inch)
XPSJ 06-04	XPSJ 1/4-5/32
XPSJ 08-06	XPSJ 5-16-1/4
XPSJ 10-08	XPSJ 3/8-5-16
XPSJ 12-10	XPSJ 1-2-3/8

XPTJ

MODEL(ϕ D1- ϕ D2)	
Tube(Metric)	Tube(Inch)
XPTJ 06-04	XPTJ 1/4-5/32
XPTJ 08-06	XPTJ 5/16-1/4
XPTJ 10-08	XPTJ 3/8-5/16
XPTJ 12-10	XPTJ 1/2-3/8

XPP

MODEL(ϕ D)	
Tube(Metric)	Tube(Inch)
XPP 04	XPP 5/32
XPP 06	XPP 3/16
XPP 08	XPP 1/4
XPP 10	XPP 5/16
XPP 12	XPP 3/8
XPP 16	XPP 1/2

XPIG

MODEL(ϕ D1- ϕ D2)	
Tube(Metric)	Tube(Inch)
XPIG 06-04	XPIG 3/16-5/32
XPIG 08-06	XPIG 1/4-5/32
XPIG 10-08	XPIG 1/4-3/16
XPIG 12-10	XPIG 5/16-1/4
XPIG 16-12	XPIG 3/8-5/16
	XPIG 1/2-3/8

XPM

MODEL(ϕ D)	
Tube(Metric)	Tube(Inch)
XPM 04	XPM 5/32
XPM 06	XPM 3/16
XPM 08	XPM 1/4
XPM 10	XPM 5/16
XPM 12	XPM 3/8
XPM 14	XPM 1/2
XPM 16	

XPZA

MODEL(ϕ D)	
Tube(Metric)	Tube(Inch)
XPZA 04	XPZA 5/32
XPZA 06	XPZA 3/16
XPZA 08	XPZA 1/4
XPZA 10	XPZA 5/16
XPZA 12	XPZA 3/8
	XPZA 1/2

XPKG

MODEL(ϕ D1- ϕ D2)	
Tube(Metric)	Tube(Inch)
XPKG 06-04	XPKG 3/16-5/32
XPKG 08-04	XPKG 1/4-5/32
XPKG 08-06	XPKG 5/16-5/32
XPKG 10-06	XPKG 3/16-3/16
XPKG 10-08	XPKG 5/16-1/4
	XPKG 3/8-1/4
	XPKG 3/8-5/16

XPK

MODEL(ϕ D)	
Tube(Metric)	Tube(Inch)
XPK 04	XPK 5/32
XPK06	XPK 3/16
XPK 08	XPK 1/4
	XPK 5/16

XPLM

MODEL(ϕ D)
Tube(Metric)
XPLM 04
XPLM06
XPLM08
XPLM10
XPLM12

Pneumatic Tube Fittings

XPHT(2)

MODEL(ϕ D-T)	
Tube(Metric)-Thread(R)	
XPHT04 -01(2)	XPHT08 -04(2)
XPHT04 -02(2)	XPHT10 -01(2)
XPHT06 -01(2)	XPHT10 -02(2)
XPHT06 -02(2)	XPHT10 -03(2)
XPHT06 -03(2)	XPHT10 -04(2)
XPHT08 -01(2)	XPHT12 -02(2)
XPHT08 -02(2)	XPHT12 -03(2)
XPHT08 -03(2)	XPHT12 -04(2)

XPHT(3)

MODEL(ϕ D-T)	
Tube(Metric)-Thread(R)	
XPHT04 -01(3)	XPHT08 -04(3)
XPHT04 -02(3)	XPHT10 -01(3)
XPHT06 -01(3)	XPHT10 -02(3)
XPHT06 -02(3)	XPHT10 -03(3)
XPHT06 -03(3)	XPHT10 -04(3)
XPHT08 -01(3)	XPHT12 -02(3)
XPHT08 -02(3)	XPHT12 -03(3)
XPHT08 -03(3)	XPHT12 -04(3)

XPPF

MODEL(ϕ D)
Tube(Metric)
XPPF04
XPPF06
XPPF07
XPPF08
XPPF10
XPPF12

XPU

MODEL(ϕ D)	
Tube(Metric)	Tube(Inch)
XPU 04	XPU 5/32
XPU 06	XPU 3/16
XPU 08	XPU 1/4
XPU 10	XPU 5/16
XPU 12	XPU 3/8
XPU 14	XPU 1/2
XPU 16	

XPV

MODEL(ϕ D)	
Tube(Metric)	Tube(Inch)
XPV 04	XPV 5/32
XPV 06	XPV 3/16
XPV 08	XPV 1/4
XPV 10	XPV 5/16
XPV 12	XPV 3/8
XPV 14	XPV 1/2
XPV 16	

XPE

MODEL(ϕ D)	
Tube(Metric)	Tube(Inch)
XPE 04	XPE 5/32
XPE 06	XPE 3/16
XPE 08	XPE 1/4
XPE 10	XPE 5/16
XPE 12	XPE 3/8
XPE 14	XPE 1/2
XPE 16	

XPY

MODEL(ϕ D)	
Tube(Metric)	Tube(Inch)
XPY 04	XPY 5/32
XPY 06	XPY 3/16
XPY 08	XPY 1/4
XPY 10	XPY 5/16
XPY 12	XPY 3/8
	XPY 1/2

XPG

MODEL(ϕ D1- ϕ D2)	
Tube(Metric)	Tube(Inch)
XPG 06-04	XPG 3/16-5/32
XPG 08-04	XPG 1/4-5/32
XPG 08-06	XPG 1/4-3/16
XPG 10-06	XPG 5/16-1/4
XPG 10-08	XPG 3/8-5/16
XPG 12-10	XPG 1/2-3/8
XPG 16-12	
XPG 16-14	

XPGE

MODEL(ϕ D1- ϕ D2)	
Tube(Metric)	Tube(Inch)
XPGE 06-04	XPGE 1/4-5/32
XPGE 08-06	XPGE 5/16-1/4
XPGE 10-08	XPGE 3/8/5/16
XPGE 12-10	XPGE 1/2-3/8
XPGE 16-12	

XPEG

MODEL(ϕ D1- ϕ D2)	
Tube(Metric)	Tube(Inch)
XPEG 06-04	XPEG 1/4-5/32
XPEG 08-06	XPEG 5/16-1/4
XPEG 10-08	XPEG 3/8-5/16
XPEG 12-10	XPEG 1/2-3/8
XPEG 16-12	

Pneumatic Tube Fittings

XPW

MODEL(ϕ D1- ϕ D2)

Tube(Metric)	Tube(Inch)
XPW 06-04	XPW 3/16-5/32
XPW 08-06	XPW 1/4-5/32
XPW 10-08	XPW 1/4-3/16
XPW 12-10	XPW 5/16-1/4
	XPW 3/8-5/16
	XPW 1/2-3/8

XPXJ

MODEL(ϕ D1~ ϕ D2)

Tube(Metric)
XPXJ08-06

XPXG

MODEL(ϕ D1- ϕ D2)

Tube(Metric)-Thread(R)
XPXG 08-06

XPXT

MODEL(ϕ D-T)

Tube(Metric)-Thread(R)
XPXT06-01
XPXT06-02

Pneumatic Tube Fittings With G Thread(o–ring)

XPC-G

MODEL(ϕ D-T)

Tube(Metric)-Thread(G)		
XPC04-G01	XPC08-G02	XPC12-G02
XPC04-G02	XPC08-G03	XPC12-G03
XPC06-G01	XPC08-G04	XPC12-G04
XPC06-G02	XPC10-G01	XPC14-G03
XPC06-G03	XPC10-G02	XPC14-G04
XPC06-G04	XPC10-G03	XPC16-G03
XPC08-G01	XPC10-G04	XPC16-G04

XPL-G

MODEL(ϕ D-T)

Tube(Metric)-Thread(G)		
XPL04-G01	XPL08-G02	XPL12-G02
XPL04-G02	XPL08-G03	XPL12-G03
XPL06-G01	XPL08-G04	XPL12-G04
XPL06-G02	XPL10-G01	XPL14-G03
XPL06-G03	XPL10-G02	XPL14-G04
XPL06-G04	XPL10-G03	XPL16-G03
XPL08-G01	XPL10-G04	XPL16-G04

XPB-G

MODEL(ϕ D-T)

Tube(Metric)-Thread(G)		
XPB04-G01	XPB08-G02	XPB12-G02
XPB04-G02	XPB08-G03	XPB12-G03
XPB06-G01	XPB08-G04	XPB12-G04
XPB06-G02	XPB10-G01	XPB14-G03
XPB06-G03	XPB10-G02	XPB14-G04
XPB06-G04	XPB10-G03	XPB16-G03
XPB08-G01	XPB10-G04	XPB16-G04

XPD-G

MODEL(ϕ D-T)

Tube(Metric)-Thread(G)		
XPD04-G01	XPD08-G02	XPD12-G02
XPD04-G02	XPD08-G03	XPD12-G03
XPD06-G01	XPD08-G04	XPD12-G04
XPD06-G02	XPD10-G01	XPD14-G03
XPD06-G03	XPD10-G02	XPD14-G04
XPD06-G04	XPD10-G03	XPD16-G03
XPD08-G01	XPD10-G04	XPD16-G04

XPLH-G

MODEL(ϕ D-T)

Tube(Metric)-Thread(G)	
XPLH 04-G01	XPLH 10-G01
XPLH 04-G02	XPLH 10-G02
XPLH 06-G01	XPLH 10-G03
XPLH 06-G02	XPLH 10-G04
XPLH 06-G03	XPLH 12-G02
XPLH 06-G04	XPLH 12-G03
XPLH 08-G01	XPLH 12-G04
XPLH 08-G02	
XPLH 08-G03	
XPLH 08-G04	

XPLL-G

MODEL(ϕ D-T)

Tube(Metric)-Thread(G)	
XPLL 04-G01	XPLL 10-G01
XPLL 04-G02	XPLL 10-G02
XPLL 06-G01	XPLL 10-G03
XPLL 06-G02	XPLL 10-G04
XPLL 06-G03	XPLL 12-G02
XPLL 06-G04	XPLL 12-G03
XPLL 08-G01	XPLL 12-G04
XPLL 08-G02	XPLL 14-G04
XPLL 08-G03	XPLL 16-G03
XPLL 08-G04	XPLL 16-G04

Pneumatic Tube Fittings With G Thread(o–ring)

XPX-G

MODEL(ϕ D-T)

Tube(Metric)-Thread(G)	
XPX 04-G01	XPX 08-G04
XPX 04-G02	XPX 10-G01
XPX 06-G01	XPX 10-G02
XPX 06-G02	XPX 10-G03
XPX 06-G03	XPX 10-G04
XPX 06-G04	XPX 12-G02
XPX 08-G01	XPX 12-G03
XPX 08-G02	XPX 12-G04
XPX 08-G03	

XPKD-G

MODEL(ϕ D1- ϕ D2-T)

Tube(Metric)-Thread(G)
XPKD 06-04-G01
XPKD 08-04-G02
XPKD 08-06-G02
XPKD 10-08-G03

XPH-G

MODEL(ϕ D-T)

Tube(Metric)-Thread(G)	
XPH 04-G01	XPH 10-G02
XPH 06-G01	XPH 10-G03
XPH 06-G02	XPH 12-G03
XPH 08-G01	XPH 12-G04
XPH 08-G02	
XPH 08-G03	

XPHF-G

MODEL(ϕ D-T)

Tube(Metric)-Thread(G)	
XPHF 04-G01	XPHF 10-G02
XPHF 06-G01	XPHF 10-G03
XPHF 06-G02	XPHF 12-G03
XPHF 08-G01	XPHF 12-G04
XPHF 08-G02	
XPHF 08-G03	

XPCF-G

MODEL(ϕ D-T)

Tube(Metric)	Tube(Inch)
XPCF 04-G01	XPCF 10-G02
XPCF 04-G02	XPCF 10-G03
XPCF 06-G01	XPCF 10-G04
XPCF 06-G02	XPCF 12-G02
XPCF 06-G03	XPCF 12-G03
XPCF 08-G01	XPCF 12-G04
XPCF 08-G02	XPCF 14-G03
XPCF 08-G03	XPCF 14-G04
XPCF 08-G04	XPCF 16-G03
XPCF 10-G01	XPCF 16-G04

XPLF-G

MODEL(ϕ D-T)

Tube(Metric)	Tube(Inch)
XPLF 04-G01	XPLF 10-G02
XPLF 04-G02	XPLF 10-G03
XPLF 06-G01	XPLF 10-G04
XPLF 06-G02	XPLF 12-G02
XPLF 06-G03	XPLF 12-G03
XPLF 08-G01	XPLF 12-G04
XPLF 08-G02	XPLF 14-G03
XPLF 08-G03	XPLF 14-G04
XPLF 08-G04	XPLF 16-G03
XPLF 10-G01	XPLF 16-G04

XPOC-G

MODEL(ϕ D-T)

Tube(Metric)	
XPOC 04-G01	XPOC 10-G01
XPOC 04-G02	XPOC 10-G02
XPOC 06-G01	XPOC 10-G03
XPOC 06-G02	XPOC 10-G04
XPOC 06-G03	XPOC 12-G02
XPOC 06-G04	XPOC 12-G03
XPOC 08-G01	XPOC 12-G04
XPOC 08-G02	XPOC 14-G04
XPOC 08-G03	XPOC 16-G03
XPOC 08-G04	XPOC 16-G04

XPXT-G

MODEL(ϕ D-T)

Tube(Metric)-Thread(G)
XPXT 06-G01
XPXT 06-G02

Speed Controls

Feature

- Accurate regulation of an optimal airflow rate for precise motioncontrol.
- Compact and space-saving configuration provides a functionally wide range of airflow rates.
- Available in control method type for metering of unidirecrional airflow either entering into or exhausting out of a driving device.

Specifcation

Fliud Type	Air,Vacuum
Operating Pressure	0~10.2Kgf/cm²(0~1.0Mpa)
Negative Pressure	-750mm Hg(10Torr)
Operating Temperature Range	0~60℃
Tube Material	Nylon and Polyurethane

Ordering Code

XJSC — 08 — 02

(1) (2) (3)

(1)Model Type
(2)Tube Outer Diameter(ϕD)

Metric Size							
Code	04	06	08	10	12	14	16
ϕD	4mm	6mm	8mm	10mm	12mm	14mm	16mm

Construction

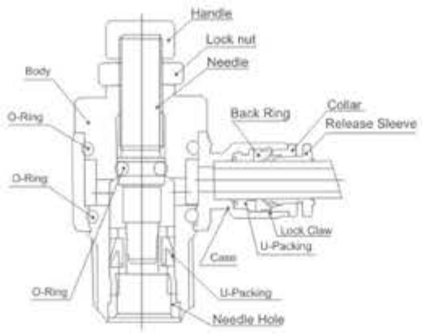

(3)Thread Type & Size

Metric Size			R(PT)Thread			
Code	M5	M6	01	02	03	04
ϕD	M5×0.8	M6×1	R1/8"	R1/4"	R3/8"	R1/2"

G(PF)Thread				
Code	G01	G02	G03	G04
Size	G1/8"	G1/4"	G3/8"	G1/2"

XJSC

MODEL(ϕ D-T)

Tube(Metric)-Thread(R)			Tube(Inch)-Thread(R)		Tube(Inch)-Thread(NPT)		
XJSC 04-M5	XJSC 06-04	XJSC 10-03	XJSC 1/4-M5	XJSC 5/16-02	XJSC 5/32-U	XJSC 1/4-N1	XJSC 3/8-N2
XJSC 04-01	XJSC 08-01	XJSC 10-04	XJSC 1/4-01	XJSC 5/16-03	XJSC 5/32-N1	XJSC 1/4-N2	XJSC 3/8-N3
XJSC 04-02	XJSC 08-02	XJSC 12-02	XJSC 1/4-02	XJSC 3/8-02	XJSC 3/16-U	XJSC 1/4-N3	XJSC 3/8-N4
XJSC 06-M5	XJSC 08-03	XJSC 12-03	XJSC 5/16-01	XJSC 3/8-03	XJSC 3/16-N1	XJSC 5/16-N1	XJSC 1/2-N3
XJSC 06-01	XJSC 08-04	XJSC 12-04			XJSC 3/16-N2	XJSC 5/16-N2	XJSC 1/2-N4
XJSC 06-02	XJSC 10-01				XJSC 3/16-N3	XJSC 5/16-N3	
XJSC 06-03	XJSC 10-02				XJSC 1/4-U	XJSC 5/16-N4	

XJSC-G

MODEL(ϕ D-T)

Tube(Metric)		
XJSC04-G01	XJSC08-G02	XJSC12-G02
XJSC04-G02	XJSC08-G03	XJSC12-G03
XJSC06-G01	XJSC08-G04	XJSC12-G04
XJSC06-G02	XJSC10-G01	
XJSC06-G03	XJSC10-G02	
XJSC06-G04	XJSC10-G03	
XJSC08-G01	XJSC10-G04	

XPA

MODEL(ϕ D)

Tube(Metric)	Tube(Inch)
XPA 04	XPA 5/32
XPA 06	XPA 3/16
XPA 08	XPA 1/4
XPA 10	XPA 5/16
XPA 12	XPA 3/8
	XPA 1/2

XSS

MODEL(ϕ D-T)

Tube(Metric)	Tube(Inch)
XSS04-01	XSS1/4-N01
XSS04-02	XSS1/4-N02
XSS06-01	XSS5/16-N01
XSS06-02	XSS5/16-N02
XSS08-01	XSS3/8-N02
XSS08-02	XSS3/8-N03
XSS10-02	XSS1/2-N02
XSS10-03	XSS1/2-N03
XSS12-03	

XSS-G

MODEL(ϕ D-T)

Tube(Metric)
XSS04-G01
XSS04-G02
XSS06-G01
XSS06-G02
XSS08-G01
XSS08-G02
XSS10-G02
XSS10-G03
XSS12-G02
XSS12-G03

Mini Fittings

Feature

- Ideal for pneumatic connections specifically for small and compact equipments.
- Aesthetically pleasing nickel-plated metallic standardized feature for all applicable compact fittings.

Specifcation

Fliud Type	Air,Vacuum
Operating Pressure	0~10.2Kgf/cm²(0~1.0Mpa)
Negative Pressure	-750mm Hg(10Torr)
Operating Temperature Range	0~60℃
Tube Material	Nylon and Polyurethane

Ordering Code

XPC — 08 — 02 — C

(1) (2) (3) (4)

(1)Model Type
(2)Tube Outer Diameter(ϕD)

Metric Size			
Code	03	04	06
ϕD	3mm	4mm	8mm

Construction

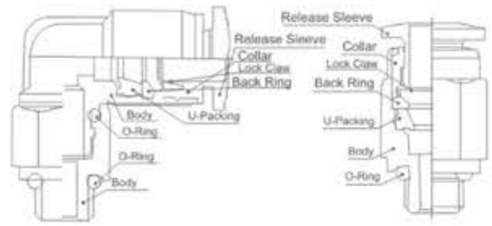

(3)Thread Type & Size

■ Metric Size

Metric Size			
Code	M3	M5	M6
ϕD	M3×0.5	M5×0.8	M6×1

■ Taper Pipe Thread

R(PT)Thread		
Code	01	G01
Size	R1/8"	G1/4"

(4)Compact Type

XPC-C

MODEL(ϕ D-T)

Tube(Metric)	
XPC03-M3C	XPC04-01C
XPC03-M5C	XPC06-M5C
XPC03-M6C	XPC06-M6C
XPC04-M3C	XPC06-01C
XPC04-M5C	
XPC04-M6C	

XPB-C

MODEL(ϕ D1-T)

Tube(Metric)	
XPB03-M3C	XPB04-01C
XPB03-M5C	XPB06-M5C
XPB03-M6C	XPB06-M6C
XPB04-M3C	XPB06-01C
XPB04-M5C	
XPB04-M6C	

XPCF-C

MODEL(ϕ D-T)

Tube(Metric)	
XPCF03-M3C	XPCF04-01C
XPCF03-M5C	XPCF06-M5C
XPCF03-M6C	XPCF06-M6C
XPCF04-M3C	XPCF06-01C
XPCF04-M5C	
XPCF04-M6C	

XPD-C

MODEL(ϕ D-T)

Tube(Metric)	
XPD03-M3C	XPD04-01C
XPD03-M5C	XPD06-M5C
XPD03-M6C	XPD06-M6C
XPD04-M3C	XPD06-01C
XPD04-M5C	
XPD04-M6C	

XPOC-C

MODEL(ϕ D-T)

Tube(Metric)	
XPOC03-M3C	XPOC04-01C
XPOC03-M5C	XPOC06-M5C
XPOC03-M6C	XPOC06-M6C
XPOC04-M3C	XPOC06-01C
XPOC04-M5C	
XPOC04-M6C	

XPLL-C

MODEL(ϕ D-T)

Tube(Metric)	
XPLL03-M3C	XPLL04-01C
XPLL03-M5C	XPLL06-M5C
XPLL03-M6C	XPLL06-M6C
XPLL04-M3C	XPLL06-01C
XPLL04-M5C	
XPLL04-M6C	

Mini Fittings

XPL-C

MODEL(ϕ D-T)
Tube(Metric)
XPL03-M3C XPL04-01C
XPL03-M5C XPL06-M5C
XPL03-M6C XPL06-M6C
XPL04-M3C XPL06-01C
XPL04-M5C
XPL04-M6C

XPE-C

MODEL(ϕ D)
Tube(Metric)
PE 03C
PE 04C
PE 06C

XPU-C

MODEL(ϕ D)
Tube(Metric)
XPU03C
XPU04C
XPU06C

XPY-C

MODEL(ϕ D)
Tube(Metric)
XPY 03C
XPY 04C
XPY 06C

XPUL-C

MODEL(ϕ D)
Tube(Metric)
XPUL 03C
XPUL 04C
XPUL 06C

XPC-G-C

MODEL(ϕ D-T)
Tube(Metric)
PC 04-G01C
PC 04-G01C

XPG-C

MODEL(ϕ D1- ϕ D2)
Tube(Metric)
XPG 04-03C
XPG 06-03C
XPG 06-04C

XPL-G-C

MODEL(ϕ D-T)
Tube(Metric)
PL 04-G01C
PL 04-G01C

XPW-C

MODEL(ϕ D1- ϕ D2)
Tube(Metric)
XPW 04-03C
XPW 06-03C
XPW 06-04C

Hand Valve

Feature

- The source of pressure can completely shut off by simply turning the knob.
- Three-way directional control configuration releases the residual internal pressure on the output side when manually Closed.
- Idea for inspecting or repairing any devices without compromising the safety.
- Directionality of airflow may be selected from the tubing or threaded input side to the tubing or threaded output side.

Construction

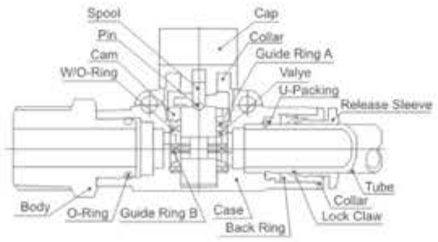

Specifcation

Fliud Type	Air,Vacuum
Operating Pressure	0~10.2Kgf/cm²(0~1.0Mpa)
Negative Pressure	-750mm Hg(1.0Torr)
Operating Temperature Range	0~60℃
Tube Material	Nylon and Polyurethane

Ordering Code

XHVFF	08	02
(1)	(2)	(3)

(1)Model Type
(2)Tube Outer Diameter(ϕ D)

Metric Size							
Code	04	06	08	10	12	14	16
ϕD	4mm	6mm	8mm	10mm	12mm	14mm	16mm

(3)Thread Type & Size

■ Metric Size

Metric Size			
Code	M5	M6	M8
ϕD	M5×0.8	M6×1	M8×1

■ Taper Pipe Thread

	R(PT)Thread				G(PF)Thread			
Code	01	02	03	04	G01	G02	G03	G04
Size	R1/8"	R1/4"	R3/8"	R1/2"	G1/8"	G1/4"	G3/8"	G1/2"

Hand Valve/Ball Valve

XHVFF

MODEL(ϕ D1- ϕ D2)
Tube(Metric)
XHVFF 06-06
XHVFF 08-06
XHVFF 08-08
XHVFF 10-08
XHVFF 10-10
XHVFF 12-10
XHVFF 12-12

XHVSS

MODEL(T1-T2)
Tube(Metric)
XHVSS 01-01
XHVSS 02-01
XHVSS 02-02
XHVSS 03-02
XHVSS 03-03
XHVSS 04-03
XHVSS 04-04

XHVSF

MODEL(ϕ D-T)	
Tube(Metric)-Thread(R)	
XHVSF 06-01	XHVSF 10-03
XHVSF 06-02	XHVSF 10-04
XHVSF 06-03	XHVSF 12-02
XHVSF 08-01	XHVSF 12-03
XHVSF 08-02	XHVSF 12-04
XHVSF 08-03	
XHVSF 10-02	

XHVFS

MODEL(ϕ D-T)	
Tube(Metric)-Thread(R)	
XHVFS 06-01	XHVFS 10-02
XHVFS 06-02	XHVFS 10-03
XHVFS 06-03	XHVFS 10-04
XHVFS 08-01	XHVFS 12-02
XHVFS 08-02	XHVFS 12-03
XHVFS 08-03	XHVFS 12-04

XHVFS-G

MODEL(ϕ D-T)	
Tube(Metric)-Thread(R)	
XHVFS 06-G01	XHVFS 12-G02
XHVFS 06-G02	XHVFS 12-G03
XHVFS 06-G03	XHVFS 12-G04
XHVFS 08-G01	
XHVFS 08-G02	
XHVFS 08-G03	
XHVFS 10-G02	
XHVFS 10-G03	
XHVFS 10-G04	

XHVSF-G

MODEL(ϕ D-T)	
Tube(Metric)-Thread(R)	
XHVSF 06-G01	XHVSF 12-G02
XHVSF 06-G02	XHVSF 12-G03
XHVSF 06-G03	XHVSF 12-G04
XHVSF 08-G01	
XHVSF 08-G02	
XHVSF 08-G03	
XHVSF 10-G02	
XHVSF 10-G03	
XHVSF 10-G04	

XHVSS-G

MODEL(T1-T2)
Tube(Metric)-Thread(R)
XHVSS 01-G01(B)
XHVSS 02-G01(B)
XHVSS 02-G02(B)
XHVSS 03-G02(B)
XHVSS 03-G03(B)
XHVSS 04-G03(B)
XHVSS 04-G04(B)

Stop Fittings

Feature

- Flow of air is completely stopped upon disconnectiong the tube and reinstated upon reconnecting the tube.
- Dual-passage mechanism allows the pressure source to be originated from either side of the pneumatic connection.
- Ideal for pneumatic applications where tubing connections are frequently re-arranged.
- Suitable for experimenting,testing,demonstration,and educating various pneumatic applications.

Specifcation

Fliud Type	Air,Vacuum
Operating Pressure	0~10.2Kgf/cm²(0~1.0Mpa)
Negative Pressure	-750mm Hg(10Torr)
Operating Temperature Range	0~60℃
Tube Material	Nylon and Polyurethane

XSPC

MODEL(ϕ D-T)

Tube(Metric)	
XSPC 04-01	XSPC 10-03
XSPC 06-01	XSPC 10-04
XSPC 06-02	XSPC 12-02
XSPC 08-02	XSPC 12-03
XSPC 08-03	XSPC 12-04
XSPC 10-02	

XSPU

MODEL(ϕ D)

Tube(Metric)
XSPU 04
XSPU 06
XSPU 08
XSPU 10
XSPU 12

XSPC-G

MODEL(ϕ D-T)

Tube(Metric)	
XSPC 04-G01	XSPC 10-G03
XSPC 06-G01	XSPC 10-G04
XSPC 06-G02	XSPC 12-G02
XSPC 08-G02	XSPC 12-G03
XSPC 08-G03	XSPC 12-G04

Check Valves

Feature

- Unti-directionality of airflow is maintained while the flow of air in the opposite direction is completely prevented.
- Constant input and output air pressure is achieved due to the controlled directionality of airflow.
- Suitable for the pneumatic applications under low operational pressure conditions.

Specifcation

Fliud Type	Air,Vacuum
Operating Pressure	0~10.2Kgf/cm²(0~1.0Mpa)
Negative Pressure	-750mm Hg(10Torr)
Operating Temperature Range	0~60℃
Tube Material	Nylon and Polyurethane

XCVPC

MODEL(ϕ D-T)

Tube(Metric)	
XCVPC 04-M5	XCVPC 08-02
XCVPC 04-M6	XCVPC 10-02
XCVPC 04-01	XCVPC 10-03
XCVPC 06-01	XCVPC 10-04
XCVPC 06-02	XCVPC 12-03
XCVPC 08-01	XCVPC 12-04

XCVPU

MODEL(ϕ D)

Tube(Metric)
XCVPU 04
XCVPU 06
XCVPU 08
XCVPU 10
XCVPU12

XCVPF

MODEL(T1-T2)

Tube(Metric)
XCVPF 01-01
XCVPF 02-02
XCVPF 03-03
XCVPF 04-04

XCVPC-G

MODEL(ϕ D-T)

Tube(Metric)	
XCVPV 04-G01	XCVPV 10-G04
XCVPV 06-G01	XCVPV 12-G03
XCVPV 06-G02	XCVPV 12-G04
XCVPV 08-G01	
XCVPV 08-G02	
XCVPV 10-G03	

Metal Push-In Fittings

XMPC

Male Stud

MODEL(ϕ D-T)

Tube(Metric)-Thread(R)			Tube(Inch)-Thread(R)			Tube(Inch)-Thread(NPT)		
XMPC03-M3	XMPC06-01	XMPC10-04	XMPC1/8-01	XMPC1/4-03	XMPC1/2-02	XMPC1/8-U10	XMPC3/16-N03	XMPC3/8-N01
XMPC03-M5	XMPC06-02	XMPC12-02	XMPC1/8-02	XMPC5/16-01	XMPC1/2-03	XMPC1/8-N01	XMPC1/4-U10	XMPC3/8-N02
XMPC04-M5	XMPC08-01	XMPC12-03	XMPC5/32-01	XMPC5/16-02	XMPC1/2-04	XMPC1/8-N02	XMPC1/4-N01	XMPC3/8-N03
XMPC04-01	XMPC08-02	XMPC12-04	XMPC5/32-02	XMPC5/16-03		XMPC5/32-U10	XMPC1/4-N02	XMPC3/8-N04
XMPC04-02	XMPC08-03	XMPC14-03	XMPC3/16-01	XMPC5/16-04		XMPC5/32-N01	XMPC1/4-N03	XMPC1/2-N02
XMPC05-M5	XMPC08-04	XMPC14-04	XMPC3/16-02	XMPC3/8-01		XMPC5/32-N02	XMPC5/16-N01	XMPC1/2-N03
XMPC05-01	XMPC10-01	XMPC16-03	XMPC3/16-03	XMPC3/8-02		XMPC3/16-U10	XMPC5/16-N02	XMPC1/2-N04
XMPC05-02	XMPC10-02	XMPC16-04	XMPC1/4-01	XMPC3/8-03		XMPC3/16-N01	XMPC5/16-N03	
XMPC06-M5	XMPC10-03		XMPC1/4-02	XMPC3/8-04		XMPC3/16-N02	XMPC5/16-N04	

XMPOC

Round Male Stud

MODEL(ϕ D-T)

Tube(Metric)-Thread(R)			Tube(Inch)-Thread(R)			Tube(Inch)-Thread(NPT)		
XMPOC03-M3	XMPOC06-01	XMPOC10-04	XMPOC1/8-01	XMPOC1/4-03	XMPOC1/2-02	XMPOC1/8-U10	XMPOC3/16-N03	XMPOC3/8-N01
XMPOC03-M5	XMPOC06-02	XMPOC12-02	XMPOC1/8-02	XMPOC5/16-01	XMPOC1/2-03	XMPOC1/8-N01	XMPOC1/4-U10	XMPOC3/8-N02
XMPOC04-M5	XMPOC08-01	XMPOC12-03	XMPOC5/32-01	XMPOC5/16-02	XMPOC1/2-04	XMPOC1/8-N02	XMPOC1/4-N01	XMPOC3/8-N03
XMPOC04-01	XMPOC08-02	XMPOC12-04	XMPOC5/32-02	XMPOC5/16-03		XMPOC5/32-U10	XMPOC1/4-N02	XMPOC3/8-N04
XMPOC04-02	XMPOC08-03	XMPOC14-03	XMPOC3/16-01	XMPOC5/16-04		XMPOC5/32-N01	XMPOC1/4-N03	XMPOC1/2-N02
XMPOC05-M5	XMPOC08-04	XMPOC14-04	XMPOC3/16-02	XMPOC3/8-01		XMPOC5/32-N02	XMPOC5/16-N01	XMPOC1/2-N03
XMPOC05-01	XMPOC10-01	XMPOC16-03	XMPOC3/16-03	XMPOC3/8-02		XMPOC3/16-U10	XMPOC5/16-N02	XMPOC1/2-N04
XMPOC05-02	XMPOC10-02	XMPOC16-04	XMPOC1/4-01	XMPOC3/8-03		XMPOC3/16-N01	XMPOC5/16-N03	
XMPOC06-M5	XMPOC10-03		XMPOC1/4-02	XMPOC3/8-04		XMPOC3/16-N02	XMPOC5/16-N04	

XMPCF

Female Stud

MODEL(ϕ D-T)

Tube(Metric)-Thread(RC)			Tube(Inch)-Thread(R)			Tube(Inch)-Thread(NPT)		
XMPCF04-01	XMPCF08-04	XMPCF14-03	XMPCF1/8-01	XMPCF1/4-03	XMPCF1/2-02	XMPCF1/8-N01	XMPCF1/4-N03	XMPCF3/8-N04
XMPCF04-02	XMPCF10-01	XMPCF14-04	XMPCF1/8-02	XMPCF5/16-01	XMPCF1/2-03	XMPCF1/8-N02	XMPCF1/4-U10	XMPCF1/2-N02
XMPCF05-01	XMPCF10-02	XMPCF16-03	XMPCF5/32-01	XMPCF5/16-02	XMPCF1/2-04	XMPCF5/32-N01	XMPCF5/16-N01	XMPCF1/2-N03
XMPCF05-02	XMPCF10-03	XMPCF16-04	XMPCF5/32-02	XMPCF5/16-03		XMPCF5/32-N02	XMPCF5/16-N02	XMPCF1/2-N04
XMPCF06-01	XMPCF10-04		XMPCF3/16-01	XMPCF5/16-04		XMPCF3/16-N01	XMPCF5/16-N03	
XMPCF06-02	XMPCF12-01		XMPCF3/16-02	XMPCF3/8-01		XMPCF3/16-N02	XMPCF5/16-N04	
XMPCF08-01	XMPCF12-02		XMPCF3/16-03	XMPCF3/8-02		XMPCF3/16-N03	XMPCF3/8-N01	
XMPCF08-02	XMPCF12-03		XMPCF1/4-01	XMPCF3/8-03		XMPCF1/4-N01	XMPCF3/8-N02	
XMPCF08-03	XMPCF12-04		XMPCF1/4-02	XMPCF3/8-04		XMPCF1/4-N02	XMPCF3/8-N03	

XMPL

Male Stud Swive Elbow

MODEL(ϕ D-T)

Tube(Metric)-Thread(R)			Tube(Inch)-Thread(R)			Tube(Inch)-Thread(NPT)		
XMPL03-M3	XMPL06-01	XMPL10-04	XMPL1/8-01	XMPL1/4-03	XMPL1/2-02	XMPL1/8-U10	XMPL3/16-N03	XMPL3/8-N01
XMPL03-M5	XMPL06-02	XMPL12-02	XMPL1/8-02	XMPL5/16-01	XMPL1/2-03	XMPL1/8-N01	XMPL1/4-U10	XMPL3/8-N02
XMPL04-M5	XMPL08-01	XMPL12-03	XMPL5/32-01	XMPL5/16-02	XMPL1/2-04	XMPL1/8-N02	XMPL1/4-N01	XMPL3/8-N03
XMPL04-01	XMPL08-02	XMPL12-04	XMPL5/32-02	XMPL5/16-03		XMPL5/32-U10	XMPL1/4-N02	XMPL3/8-N04
XMPL04-02	XMPL08-03	XMPL14-03	XMPL3/16-01	XMPL5/16-04		XMPL5/32-N01	XMPL1/4-N03	XMPL1/2-N02
XMPL05-M5	XMPL08-04	XMPL14-04	XMPL3/16-02	XMPL3/8-01		XMPL5/32-N02	XMPL5/16-N01	XMPL1/2-N03
XMPL05-01	XMPL10-01	XMPL16-03	XMPL3/16-03	XMPL3/8-02		XMPL3/16-U10	XMPL5/16-N02	XMPL1/2-N04
XMPL05-02	XMPL10-02	XMPL16-04	XMPL1/4-01	XMPL3/8-03		XMPL3/16-N01	XMPL5/16-N03	
XMPL06-M5	XMPL10-03		XMPL1/4-02	XMPL3/8-04		XMPL3/16-N02	XMPL5/16-N04	

XMPLN

Male Stud Elbow

MODEL(ϕ D-T)

Tube(Metric)-Thread(R)			Tube(Inch)-Thread(R)			Tube(Inch)-Thread(NPT)		
XMPLN03-M3	XMPLN06-01	XMPLN10-04	XMPLN1/8-01	XMPLN1/4-03	XMPLN1/2-02	XMPLN1/8-U10	XMPLN3/16-N03	XMPLN3/8-N01
XMPLN03-M5	XMPLN06-02	XMPLN12-02	XMPLN1/8-02	XMPLN5/16-01	XMPLN1/2-03	XMPLN1/8-N01	XMPLN1/4-U10	XMPLN3/8-N02
XMPLN04-M5	XMPLN08-01	XMPLN12-03	XMPLN5/32-01	XMPLN5/16-02	XMPLN1/2-04	XMPLN1/8-N02	XMPLN1/4-N01	XMPLN3/8-N03
XMPLN04-01	XMPLN08-02	XMPLN12-04	XMPLN5/32-02	XMPLN5/16-03		XMPLN5/32-U10	XMPLN1/4-N02	XMPLN3/8-N04
XMPLN04-02	XMPLN08-03	XMPLN14-03	XMPLN3/16-01	XMPLN5/16-04		XMPLN5/32-N01	XMPLN1/4-N03	XMPLN1/2-N02
XMPLN05-M5	XMPLN08-04	XMPLN14-04	XMPLN3/16-02	XMPLN3/8-01		XMPLN5/32-N02	XMPLN5/16-N01	XMPLN1/2-N03
XMPLN05-01	XMPLN10-01	XMPLN16-03	XMPLN3/16-03	XMPLN3/8-02		XMPLN3/16-U10	XMPLN5/16-N02	XMPLN1/2-N04
XMPLN05-02	XMPLN10-02	XMPLN16-04	XMPLN1/4-01	XMPLN3/8-03		XMPLN3/16-N01	XMPLN5/16-N03	
XMPLN06-M5	XMPLN10-03		XMPLN1/4-02	XMPLN3/8-04		XMPLN3/16-N02	XMPLN5/16-N04	

Metal Push-In Fittings

XMPGJ

Plug-In Reducer

MODEL(ϕD1- ϕD2)	
Tube(Metric)	Tube(Inch)
XMPGJ 06-04	XMPGJ 1/4-5/32
XMPGJ 08-04	XMPGJ 5/16-5/32
XMPGJ 08-06	XMPGJ 5/16-1/4
XMPGJ 10-06	XMPGJ 3/8-1/4
XMPGJ 10-08	XMPGJ 3/8-5/16
XMPGJ 12-06	XMPGJ 1/2-1/4
XMPGJ 12-08	
XMPGJ 12-10	

XMPLJ

Plug-In Elbow

MODEL(ϕD)	
Tube(Metric)	Tube(Inch)
XMPLJ 04	XMPLJ 1/8
XMPLJ 05	XMPLJ 5/32
XMPLJ 06	XMPLJ 3/16
XMPLJ 08	XMPLJ 1/4
XMPLJ 10	XMPLJ 5/16
XMPLJ 12	XMPLJ 3/8
XMPLJ 14	XMPLJ 1/2
XMPLJ 16	

XMPLGJ

Plug-In Reducer Elbow

MODEL(ϕD1- ϕD2)	
Tube(Metric)	Tube(Inch)
XMPLGJ 06-04	XMPLGJ 1/4-5/32
XMPLGJ 08-04	XMPLGJ 5/16-5/32
XMPLGJ 08-06	XMPLGJ 5/16-1/4
XMPLGJ 10-06	XMPLGJ 3/8-1/4
XMPLGJ 10-08	XMPLGJ 3/8-5/16
XMPLGJ 12-06	XMPLGJ 1/2-1/4
XMPLGJ 12-08	
XMPLGJ 12-10	

XMPTJ

Plug-In Tee

MODEL(ϕD)	
Tube(Metric)	Tube(Inch)
XMPTJ 04	XMPTJ 1/8
XMPTJ 05	XMPTJ 5/32
XMPTJ 06	XMPTJ 3/16
XMPTJ 08	XMPTJ 1/4
XMPTJ 10	XMPTJ 5/16
XMPTJ 12	XMPTJ 3/8
XMPTJ 14	XMPTJ 1/2
XMPTJ 16	

XMPTGJ

Plug-in Reducer Tee

MODEL(ϕD1- ϕD2)	
Tube(Metric)	Tube(Inch)
XMPTGJ 06-04	XMPTGJ 1/4-5/32
XMPTGJ 08-04	XMPTGJ 5/16-5/32
XMPTGJ 08-06	XMPTGJ 5/16-1/4
XMPTGJ 10-06	XMPTGJ 3/8-1/4
XMPTGJ 10-08	XMPTGJ 3/8-5/16
XMPTGJ 12-06	XMPTGJ 1/2-1/4
XMPTGJ 12-08	
XMPTGJ 12-10	

XMPDJ

Plug-in Run Tee

MODEL(ϕD)	
Tube(Metric)	Tube(Inch)
XMPDJ 04	XMPDJ 1/8
XMPDJ 05	XMPDJ 5/32
XMPDJ 06	XMPDJ 3/16
XMPDJ 08	XMPDJ 1/4
XMPDJ 10	XMPDJ 5/16
XMPDJ 12	XMPDJ 3/8
XMPDJ 14	XMPDJ 1/2
XMPDJ 16	

XMPDGJ

Plug-In Reducer Run Tee

MODEL(ϕD1- ϕD2)	
Tube(Metric)	Tube(Inch)
XMPDGJ 06-04	XMPDGJ 1/4-5/32
XMPDGJ 08-04	XMPDGJ 5/16-5/32
XMPDGJ 08-06	XMPDGJ 5/16-1/4
XMPDGJ 10-06	XMPDGJ 3/8-1/4
XMPDGJ 10-08	XMPDGJ 3/8-5/16
XMPDGJ 12-06	XMPDGJ 1/2-1/4
XMPDGJ 12-08	
XMPDGJ 12-10	

XMPXJ

Plug-In Y

MODEL(ϕD)	
Tube(Metric)	Tube(Inch)
XMPXJ 04	XMPXJ 1/8
XMPXJ 05	XMPXJ 5/32
XMPXJ 06	XMPXJ 3/16
XMPXJ 08	XMPXJ 1/4
XMPXJ 10	XMPXJ 5/16
XMPXJ 12	XMPXJ 3/8
XMPXJ 14	XMPXJ 1/2
XMPXJ 16	

XMPXGJ

Plug-In Reducer Y

MODEL(ϕD1- ϕD2)	
Tube(Metric)	Tube(Inch)
XMPXGJ 06-04	XMPXGJ 1/4-5/32
XMPXGJ 08-04	XMPXGJ 5/16-5/32
XMPXGJ 08-06	XMPXGJ 5/16-1/4
XMPXGJ 10-06	XMPXGJ 3/8-1/4
XMPXGJ 10-08	XMPXGJ 3/8-5/16
XMPXGJ 12-06	XMPXGJ 1/2-1/4
XMPXGJ 12-08	
XMPXGJ 12-10	

XMBJ

Plug-In Barb

MODEL(ϕD1- ϕD2)	
Tube(Metric)	Tube(Inch)
XMBJ 07-04	XMBJ 7-5/32
XMBJ 08-04	XMBJ 8-5/32
XMBJ 08-06	XMBJ 8-1/4
XMBJ 10-06	XMBJ 10-1/4
XMBJ 10-08	XMBJ 10-5/16
XMBJ 12-06	XMBJ 12-1/4
XMBJ 12-08	XMBJ 12-5/16
XMBJ 12-10	XMBJ 12-3/8

Metal Push-In Fittings

XMJ

Plug-In

MODEL(ϕD)	
Tube(Metric)	Tube(inch)
XMJ 03	XMJ 1/8
XMJ 04	XMJ 5/32
XMJ 05	XMJ 3/16
XMJ 06	XMJ 1/4
XMJ 08	XMJ 5/16
XMJ 10	XMJ 3/8
XMJ 12	XMJ 1/2
XMJ 14	
XMJ 16	

Matel Push-InFittings With G Thread(O-Ring)

XMPC-G

Male Stud

MODEL(ϕD-T)	
Tube(Metric)-Thread(G)	
XMPC03-G01	XMPC10-G02
XMPC04-G01	XMPC10-G03
XMPC04-G02	XMPC10-G04
XMPC05-G01	XMPC12-G01
XMPC05-G02	XMPC12-G02
XMPC06-G01	XMPC12-G03
XMPC06-G02	XMPC12-G04
XMPC08-G01	XMPC14-G03
XMPC08-G02	XMPC14-G04
XMPC08-G03	XMPC16-G03
XMPC08-G04	XMPC16-G04
XMPC10-G01	

XMPOC-G

Round Male Stud

MODEL(ϕD-T)	
Tube(Metric)-Thread(G)	
XMPOC03-G01	XMPOC10-G02
XMPOC04-G01	XMPOC10-G03
XMPOC04-G02	XMPOC10-G04
XMPOC05-G01	XMPOC12-G01
XMPOC05-G02	XMPOC12-G02
XMPOC06-G01	XMPOC12-G03
XMPOC06-G02	XMPOC12-G04
XMPOC08-G01	XMPOC14-G03
XMPOC08-G02	XMPOC14-G04
XMPOC08-G03	XMPOC16-G03
XMPOC08-G04	XMPOC16-G04
XMPOC10-G01	

XMPL-G

Male Stud Elbow

MODEL(ϕD-T)	
Tube(Metric)-Thread(G)	
XMPL03-G01	XMPL10-G02
XMPL04-G01	XMPL10-G03
XMPL04-G02	XMPL10-G04
XMPL05-G01	XMPL12-G01
XMPL05-G02	XMPL12-G02
XMPL06-G01	XMPL12-G03
XMPL06-G02	XMPL12-G04
XMPL08-G01	XMPL14-G03
XMPL08-G02	XMPL14-G04
XMPL08-G03	XMPL16-G03
XMPL08-G04	XMPL16-G04
XMPL10-G01	

XMPLL-G

Extended Male Elbow

MODEL(ϕD-T)	
Tube(Metric)-Thread(G)	
XMPLL04-G01	XMPLL10-G02
XMPLL04-G02	XMPLL10-G03
XMPLL05-G01	XMPLL10-G04
XMPLL05-G02	XMPLL12-G01
XMPLL06-G01	XMPLL12-G02
XMPLL06-G02	XMPLL12-G03
XMPLL08-G01	XMPLL12-G04
XMPLL08-G02	XMPLL14-G03
XMPLL08-G03	XMPLL14-G04
XMPLL08-G04	XMPLL16-G03
XMPLL10-G01	XMPLL16-G04

XMPT-G

Male Stud Branch Tee

MODEL(ϕD-T)	
Tube(Metric)-Thread(G)	
XMPT04-G01	XMPT10-G02
XMPT04-G02	XMPT10-G03
XMPT05-G01	XMPT10-G04
XMPT05-G02	XMPT12-G01
XMPT06-G01	XMPT12-G02
XMPT06-G02	XMPT12-G03
XMPT08-G01	XMPT12-G04
XMPT08-G02	XMPT14-G03
XMPT08-G03	XMPT14-G04
XMPT08-G04	XMPT16-G03
XMPT10-G01	XMPT16-G04

XMPD-G

Male Run Tee

MODEL(ϕD-T)	
Tube(Metric)-Thread(G)	
XMPD04-G01	XMPD10-G02
XMPD04-G02	XMPD10-G03
XMPD05-G01	XMPD10-G04
XMPD05-G02	XMPD12-G01
XMPD06-G01	XMPD12-G02
XMPD06-G02	XMPD12-G03
XMPD08-G01	XMPD12-G04
XMPD08-G02	XMPD14-G03
XMPD08-G03	XMPD14-G04
XMPD08-G04	XMPD16-G03
XMPD10-G01	XMPD16-G04

Matel Push-In Fittings With G Thread(O-Ring)

XMPX-G

Male Y

MODEL(ϕ D-T)	
Tube(Metric)-Thread(G)	
XMPX04-G01	XMPX10-G03
XMPX04-G02	XMPX10-G04
XMPX05-G01	XMPX12-G01
XMPX05-G02	XMPX12-G02
XMPX06-G01	XMPX12-G03
XMPX06-G02	XMPX12-G04
XMPX08-G01	XMPX14-G03
XMPX08-G02	XMPX14-G04
XMPX08-G03	XMPX16-G03
XMPX08-G04	XMPX16-G04
XMPX10-G01	
XMPX10-G02	

XMPCJ-G

Male Sandpipe

MODEL(ϕ D-T)	
Tube(Metric)-Thread(G)	
XMPCJ04-G01	XMPCJ10-G03
XMPCJ04-G02	XMPCJ10-G04
XMPCJ05-G01	XMPCJ12-G01
XMPCJ05-G02	XMPCJ12-G02
XMPCJ06-G01	XMPCJ12-G03
XMPCJ06-G02	XMPCJ12-G04
XMPCJ08-G01	XMPCJ14-G03
XMPCJ08-G02	XMPCJ14-G04
XMPCJ08-G03	XMPCJ16-G03
XMPCJ08-G04	XMPCJ16-G04
XMPCJ10-G01	
XMPCJ10-G02	

XMPH-G

Single Male Banjo

MODEL(ϕ D-T)	
Tube(Metric)-Thread(G)	
XMPH04-G01	XMPH10-G03
XMPH04-G02	XMPH10-G04
XMPH05-G01	XMPH12-G01
XMPH05-G02	XMPH12-G02
XMPH06-G01	XMPH12-G03
XMPH06-G02	XMPH12-G04
XMPH08-G01	XMPH14-G03
XMPH08-G02	XMPH14-G04
XMPH08-G03	XMPH16-G03
XMPH08-G04	XMPH16-G04
XMPH10-G01	
XMPH10-G02	

XMDPH-G

Double Male Banjo

MODEL(ϕ D-T)	
Tube(Metric)-Thread(G)	
XMDPH04-G01	XMDPH10-G03
XMDPH04-G02	XMDPH10-G04
XMDPH05-G01	XMDPH12-G01
XMDPH05-G02	XMDPH12-G02
XMDPH06-G01	XMDPH12-G03
XMDPH06-G02	XMDPH12-G04
XMDPH08-G01	XMDPH14-G03
XMDPH08-G02	XMDPH14-G04
XMDPH08-G03	XMDPH16-G03
XMDPH08-G04	XMDPH16-G04
XMDPH10-G01	
XMDPH10-G02	

XMTPH-G

Tripe Male Banjo

MODEL(ϕ D-T)	
Tube(Metric)-Thread(G)	
XMTPH04-G01	XMTPH10-G03
XMTPH04-G02	XMTPH10-G04
XMTPH05-G01	XMTPH12-G01
XMTPH05-G02	XMTPH12-G02
XMTPH06-G01	XMTPH12-G03
XMTPH06-G02	XMTPH12-G04
XMTPH08-G01	XMTPH14-G03
XMTPH08-G02	XMTPH14-G04
XMTPH08-G03	XMTPH16-G03
XMTPH08-G04	XMTPH16-G04
XMTPH10-G01	
XMTPH10-G02	

XPHF-G

Male Run Tee

MODEL(ϕ D-T)	
Tube(Metric)-Thread(G)	
XPHF04-G01	XPHF10-G03
XPHF04-G02	XPHF10-G04
XPHF05-G01	XPHF12-G01
XPHF05-G02	XPHF12-G02
XPHF06-G01	XPHF12-G03
XPHF06-G02	XPHF12-G04
XPHF08-G01	XPHF14-G03
XPHF08-G02	XPHF14-G04
XPHF08-G03	XPHF16-G03
XPHFD08-G04	XPHF16-G04
XPHF10-G01	
XPHF10-G02	

XMPK-G

Single Male double Banjo

MODEL(ϕ D-T)	
Tube(Metric)-Thread(G)	
XMPK04-G01	XMPK10-G02
XMPK04-G02	XMPK10-G03
XMPK05-G01	XMPK10-G04
XMPK05-G02	XMPK12-G01
XMPK06-G01	XMPK12-G02
XMPK06-G02	XMPK12-G03
XMPK08-G01	XMPK12-G04
XMPK08-G02	XMPK14-G03
XMPK08-G03	XMPK14-G04
XMPK08-G04	XMPK16-G03
XMPK10-G01	XMPK16-G04

XMDPK-G

Double Male double Banjo

MODEL(ϕ D-T)	
Tube(Metric)-Thread(G)	
XMDPK04-G01	XMDPK10-G02
XMDPK04-G02	XMDPK10-G03
XMDPK05-G01	XMDPK10-G04
XMDPK05-G02	XMDPK12-G01
XMDPK06-G01	XMDPK12-G02
XMDPK06-G02	XMDPK12-G03
XMDPK08-G01	XMDPK12-G04
XMDPK08-G02	XMDPK14-G03
XMDPK08-G03	XMDPK14-G04
XMDPK08-G04	XMDPK16-G03
XMDPK10-G01	XMDPK16-G04

Matel Push-In Fittings With G Thread(O-Ring)

XMTPK-G

Tripe Male double Banjo

MODEL(ϕ D-T)		
Tube(Metric)-Thread(G)		
XMTPK04-G01	XMTPK08-G03	XMTPK12-G03
XMTPK04-G02	XMTPK08-G04	XMTPK12-G04
XMTPK05-G01	XMTPK10-G01	XMTPK14-G03
XMTPK05-G02	XMTPK10-G02	XMTPK14-G04
XMTPK06-G01	XMTPK10-G03	XMTPK16-G03
XMTPK06-G02	XMTPK10-G04	XMTPK16-G04
XMTPK08-G01	XMTPK12-G01	
XMTPK08-G02	XMTPK12-G02	

Stainless Steel 316 Push-In Fittings

XMPCS

Male Stud

MODEL(ϕ D-T)								
Tube(Metric)-Thread(R)			Tube(Inch)-Thread(G)			Tube(Inch)-Thread(NPT)		
XMPCS04-M5	XMPCS08-01	XMPCS10-03	XMPCS04-G01	XMPCS08-G03	XMPCS12-G02	XMPCS1/8-U10	XMPCS1/4-N01	XMPCS3/8-N02
XMPCS04-01	XMPCS08-02	XMPCS10-04	XMPCS04-G02	XMPCS08-G04	XMPCS12-G03	XMPCS1/8-N01	XMPCS1/4-N02	XMPCS3/8-N03
XMPCS04-02	XMPCS08-03	XMPCS12-02	XMPCS06-G01	XMPCS10-G01	XMPCS12-G04	XMPCS1/8-N02	XMPCS1/4-N03	XMPCS3/8-N04
XMPCS06-M5	XMPCS08-04	XMPCS12-03	XMPCS06-G02	XMPCS10-G02		XMPCS5/32-U10	XMPCS5/16-N01	XMPCS1/2-N02
XMPCS06-01	XMPCS10-01	XMPCS12-04	XMPCS08-G01	XMPCS10-G03		XMPCS5/32-N01	XMPCS5/16-N02	XMPCS1/2-N03
XMPCS06-02	XMPCS10-02		XMPCS08-G02	XMPCS10-G04		XMPCS5/32-N02	XMPCS5/16-N03	XMPCS1/2-N04
						XMPCS1/4-U10	XMPCS3/8-N01	

XMPLS

Male Stud Swivel Elbow

MODEL(ϕ D-T)								
Tube(Metric)-Thread(R)			Tube(Inch)-Thread(G)			Tube(Inch)-Thread(NPT)		
XMPLS04-M5	XMPLS08-01	XMPLS10-03	XMPLS04-G01	XMPLS08-G03	XMPLS12-G02	XMPLS1/8-U10	XMPLS1/4-N01	XMPLS3/8-N02
XMPLS04-01	XMPLS08-02	XMPLS10-04	XMPLS04-G02	XMPLS08-G04	XMPLS12-G03	XMPLS1/8-N01	XMPLS1/4-N02	XMPLS3/8-N03
XMPLS04-02	XMPLS08-03	XMPLS12-02	XMPLS06-G01	XMPLS10-G01	XMPLS12-G04	XMPLS1/8-N02	XMPLS1/4-N03	XMPLS3/8-N04
XMPLS06-M5	XMPLS08-04	XMPLS12-03	XMPLS06-G02	XMPLS10-G02		XMPLS5/32-U10	XMPLS5/16-N01	XMPLS1/2-N02
XMPLS06-01	XMPLS10-01	XMPLS12-04	XMPLS08-G01	XMPLS10-G03		XMPLS5/32-N01	XMPLS5/16-N02	XMPLS1/2-N03
XMPLS06-02	XMPLS10-02		XMPLS08-G02	XMPLS10-G04		XMPLS5/32-N02	XMPLS5/16-N03	XMPLS1/2-N04
						XMPLS1/4-U10	XMPLS3/8-N01	

XMPCFS

Female Straight

MODEL(ϕ D-T)					
Tube(Metric)-Thread(R)		Tube(Inch)-Thread(G)		Tube(Inch)-Thread(NPT)	
XMPCFS04-M5	XMPCFS10-01	XMPCFS04-G01	XMPCFS10-G03	XMPCFS1/8-U10	XMPCFS5/16-N01
XMPCFS04-01	XMPCFS10-02	XMPCFS04-G02	XMPCFS10-G04	XMPCFS1/8-N01	XMPCFS5/16-N02
XMPCFS04-02	XMPCFS10-03	XMPCFS06-G01	XMPCFS12-G02	XMPCFS1/8-N02	XMPCFS5/16-N03
XMPCFS06-M5	XMPCFS10-04	XMPCFS06-G02	XMPCFS12-G03	XMPCFS5/32-U10	XMPCFS3/8-N01
XMPCFS06-01	XMPCFS12-02	XMPCFS08-G01	XMPCFS12-G04	XMPCFS5/32-N01	XMPCFS3/8-N02
XMPCFS06-02	XMPCFS12-03	XMPCFS08-G02		XMPCFS5/32-N02	XMPCFS3/8-N03
XMPCFS08-01	XMPCFS12-04	XMPCFS08-G03		XMPCFS1/4-U10	XMPCFS3/8-N04
XMPCFS08-02		XMPCFS08-G04		XMPCFS1/4-N01	XMPCFS1/2-N02
XMPCFS08-03		XMPCFS10-G01		XMPCFS1/4-N02	XMPCFS1/2-N03
XMPCFS08-04		XMPCFS10-G02		XMPCFS1/4-N03	XMPCFS1/2-N04

XMPTS

Male Stud Branch Tee

MODEL(ϕ D-T)					
Tube(Metric)-Thread(R)		Tube(Inch)-Thread(G)		Tube(Inch)-Thread(NPT)	
XMPTS04-M5	XMPTS10-01	XMPTS04-G01	XMPTS10-G03	XMPTS1/8-U10	XMPTS5/16-N01
XMPTS04-01	XMPTS10-02	XMPTS04-G02	XMPTS10-G04	XMPTS1/8-N01	XMPTS5/16-N02
XMPTS04-02	XMPTS10-03	XMPTS06-G01	XMPTS12-G02	XMPTS1/8-N02	XMPTS5/16-N03
XMPTS06-M5	XMPTS10-04	XMPTS06-G02	XMPTS12-G03	XMPTS5/32-U10	XMPTS3/8-N01
XMPTS06-01	XMPTS12-02	XMPTS08-G01	XMPTS12-G04	XMPTS5/32-N01	XMPTS3/8-N02
XMPTS06-02	XMPTS12-03	XMPTS08-G02		XMPTS5/32-N02	XMPTS3/8-N03
XMPTS08-01	XMPTS12-04	XMPTS08-G03		XMPTS1/4-U10	XMPTS3/8-N04
XMPTS08-02		XMPTS08-G04		XMPTS1/4-N01	XMPTS1/2-N02
XMPTS08-03		XMPTS10-G01		XMPTS1/4-N02	XMPTS1/2-N03
XMPTS08-04		XMPTS10-G02		XMPTS1/4-N03	XMPTS1/2-N04

Stainless Steel 316 Push-In Fittings

XMPUCS

Union Straight

MODEL(ϕ D)	
Tube(Metric)	Tube(Inch)
XMPUCS 04	XMPUCS 1/8
XMPUCS 06	XMPUCS 5/32
XMPUCS 08	XMPUCS 1/4
XMPUCS 10	XMPUCS 5/16
XMPUCS 12	XMPUCS 3/8
	XMPUCS 1/2

XMPULS

Union Elbow

MODEL(ϕ D)	
Tube(Metric)	Tube(Inch)
XMPULS 04	XMPULS 1/8
XMPULS 06	XMPULS 5/32
XMPULS 08	XMPULS 1/4
XMPULS 10	XMPULS 5/16
XMPULS 12	XMPULS 3/8
	XMPULS 1/2

XMPUTS

Union Tee

MODEL(ϕ D)	
Tube(Metric)	Tube(Inch)
XMPUTS 04	XMPUTS 1/8
XMPUTS 06	XMPUTS 5/32
XMPUTS 08	XMPUTS 1/4
XMPUTS 10	XMPUTS 5/16
XMPUTS 12	XMPUTS 3/8
	XMPUTS 1/2

XMPMS

Union Elbow

MODEL(ϕ D)	
Tube(Metric)	Tube(Inch)
XMPMS 04	XMPMS 1/8
XMPMS 06	XMPMS 5/32
XMPMS 08	XMPMS 1/4
XMPMS 10	XMPMS 5/16
XMPMS 12	XMPMS 3/8
	XMPMS 1/2

Metal Speed Controls

Feature

- Accurate regulation of an optimal air flow rate for Precise motion control.
- The compact design provides the comparable rang of speed as the larger standard Speed continue roller do.

Specifcation

Material	Body and collet:Nickel-plated Brass O-ring:NBR(other material is available on request)
Threads	BSPT,BSPP,NPT,Metric threads
Pressure Tube to connect	0.8-16bar(see tube)PU,PE,Nylon 6-11-12
Fluid	Compressed air
Temperature	-10℃~60℃(see data of used tubing)

- When You order Control In Type,Pls Put BAt The End of Model Type.For Example:MNSE08-02B

XMNSE

Elbow

MODEL(ϕ D-T)					
Tube(Metric)-Thread(R)		Tube(Inch)-Thread(R)		Tube(Inch)-Thread(NPT)	
XMNSE04-M5	XMNSE08-03	XMNSE1/8-01	XMNSE5/16-03	XMNSE1/8-U10	XMNSE1/4-N02
XMNSE04-M6	XMNSE08-04	XMNSE1/8-02	XMNSE5-16-04	XMNSE1/8-N01	XMNSE1/4-n03
XMNSE04-01	XMNSE10-01	XMNSE5/32-01	XMNSE3/8-01	XMNSE1/8-N02	XMNSE5/16-N01
XMNSE04-02	XMNSE10-02	XMNSE5/32-02	XMNSE3/8-02	XMNSE5/32-U10	XMNSE5/16-N02
XMNSE04-03	XMNSE10-03	XMNSE3/16-01	XMNSE3/8-03	XMNSE5/32-N01	XMNSE5/16-N03
XMNSE06-M5	XMNSE10-04	XMNSE3/16-02	XMNSE3/8-04	XMNSE5/32-N02	XMNSE3/8-N01
XMNSE06-M6	XMNSE12-01	XMNSE3/16-03	XMNSE1/2-02	XMNSE3/16-U10	XMNSE3/8-N02
XMNSE06-01	XMNSE12-02	XMNSE1/4-01	XMNSE1/2-03	XMNSE3/16-N01	XMNSE3/8-N03
XMNSE06-02	XMNSE12-03	XMNSE1/4-02	XMNSE1/2-04	XMNSE3/16-N02	XMNSE3/8-N04
XMNSE06-03	XMNSE12-04	XMNSE1/4-03		XMNSE3/16-N03	XMNSE1/2-N02
XMNSE08-01	XMNSE16-03	XMNSE5/16-01		XMNSE1/4-U10	XMNSE1/2-N03
XMNSE08-02	XMNSE16-04	XMNSE5/16-02		XMNSE1/4-N01	XMNSE1/2-N04

Metal Speed Controls

XMNSE-G

Elbow(G thread)

MODEL(ϕ D-T)	
Tube(Inch)-Thread(G)	
XMNSE04-G01	XMNSE10-G02
XMNSE04-G02	XMNSE10-G03
XMNSE05-G01	XMNSE10-G04
XMNSE05-G02	XMNSE12-G01
XMNSE06-G01	XMNSE12-G02
XMNSE06-G02	XMNSE12-G03
XMNSE08-G01	XMNSE12-G04
XMNSE08-G02	XMNSE14-G03
XMNSE08-G03	XMNSE14-G04
XMNSE08-G04	XMNSE16-G03
XMNSE10-G01	XMNSE16-G04

XMNSP-G

Screw Type G thread

MODEL(ϕ D-T)	
Tube(Inch)-Thread(R)	
XMNSP04-G01	XMNSE10-G02
XMNSP04-G02	XMNSP10-G03
XMNSP05-G01	XMNSP10-G04
XMNSP05-G02	XMNSP12-G01
XMNSP06-G01	XMNSP12-G02
XMNSP06-G02	XMNSP12-G03
XMNSP08-G01	XMNSP12-G04
XMNSP08-G02	XMNSP14-G03
XMNSP08-G03	XMNSP14-G04
XMNSP08-G04	XMNSP16-G03
XMNSP10-G01	XMNSP16-G04

XMNSP

Screw type

MODEL(ϕ -T)					
Tube(Metric)-Thread(R)		Tube(Inch)-Thread(R)		Tube(Inch)-Thread(NPT)	
XMNSP04-M5	XMNSP08-03	XMNSP1/8-01	XMNSP5/16-03	XMNSP1/8-U10	XMNSP1/4-N02
XMNSP04-M6	XMNSP08-04	XMNSP1/8-02	XMNSP5-16-04	XMNSP1/8-N01	XMNSP1/4-N03
XMNSP04-01	XMNSP10-01	XMNSP5/32-01	XMNSP3/8-01	XMNSP1/8-N02	XMNSP5/16-N01
XMNSP04-02	XMNSP10-02	XMNSP5/32-02	XMNSP3/8-02	XMNSP5/32-U10	XMNSP5/16-N02
XMNSP04-03	XMNSP10-03	XMNSP3/16-01	XMNSP3/8-03	XMNSP5/32-N01	XMNSP5/16-N03
XMNSP06-M5	XMNSP10-04	XMNSP3/16-02	XMNSP3/8-04	XMNSP5/32-N02	XMNSP3/8-N01
XMNSP06-M6	XMNSP12-01	XMNSP3/16-03	XMNSP1/2-02	XMNSP3/16-U10	XMNSP3/8-N02
XMNSP06-01	XMNSP12-02	XMNSP1/4-01	XMNSP1/2-03	XMNSP3/16-N01	XMNSP3/8-N03
XMNSP06-02	XMNSP12-03	XMNSP1/4-02	XMNSP1/2-04	XMNSP3/16-N02	XMNSP3/8-N04
XMNSP06-03	XMNSP12-04	XMNSP1/4-03		XMNSP3/16-N03	XMNSP1/2-N02
XMNSP08-01	XMNSP16-03	XMNSP5/16-01		XMNSP1/4-U10	XMNSP1/2-N03
XMNSP08-02	XMNSP16-04	XMNSP5/16-02		XMNSP1/4-N01	XMNSP1/2-N04

XMNSR

Rapid type

MODEL(ϕ D-T)			
Tube(Inch)-Thread(R)		Tube(Inch)-Thread(G)	
XMNSR-5/3-M5	XMNSR-8/6-03	XMNSR-5/3-G01	XMNSR-10/8-G04
XMNSR-5/3-M6	XMNSR-10/8-01	XMNSR-6/4-G01	XMNSR-12/10-G03
XMNSR-5/3-01	XMNSR-10/8-02	XMNSR-6/4-G02	XMNSR-12/10-G04
XMNSR-6/4-M5	XMNSR-10/8-03	XMNSR-6/4-G03	
XMNSR-6/4-M6	XMNSR-10/8-04	XMNSR-8/6-G01	
XMNSR-6/4-01	XMNSR-12/10-03	XMNSR-8/6-G02	
XMNSR-6/4-02	XMNSR-12/10-04	XMNSR-8/6-G03	
XMNSR-6/4-03		XMNSR-10/8-G01	
XMNSR-8/6-01		XMNSR-10/8-G02	
XMNSR-8/6-02		XMNSR-10/8-G03	

XMNSF

Union Straight

MODEL(ϕ D)	
Tube(Metric)	Tube(Inch)
XMNSF04	XMNSF1/8
XMNSF06	XMNSF5/32
XMNSF08	XMNSF3/16
XMNSF10	XMNSF1/4
XMNSF12	XMNSF5/16
	XMNSF3/8
	XMNSF1/2

Rapid Fittings For The Plastic Tubings

Feature

- The rapid fittings can be used with rigid nylon tubes.
- A locking nut is provided and can be tightened both manually and With a spanner.
- The special shape of the guiding cone ensures that the tube can not be accidentally cut.

Specifcation

Material	Body and collet:Nickel-plated Brass O-ring:NBR(other material is available on request)
Threads	BSPT,BSPP,NPT,Metric threads
Pressure	0.8-16bar(see tube)
Fluid	Compressed air
Temperature	-10℃~60℃(see data of used tubing)

Construction

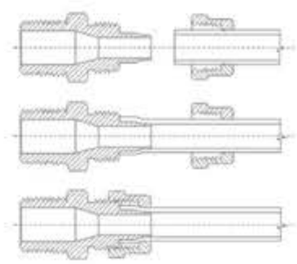

Quick coupler

SH

Model	Size
SH-20	5/16" Tube
SH-30	3/8" Tube
SH-40	1/2" Tube

SF

Model	Size
SF-20	1/4 PT
SF-30	3/8 PT
SF-40	1/2 PT

SM

Model	Size
SM-20	1/4 PT
SM-30	3/8 PT
SM-40	1/2 PT

SP

Model	Size
SP-20	5/16" Tube
SP-30	3/8" Tube
SP-40	1/2" Tube

PH

Model	Size
PH-20	5/16" Tube
PH-30	3/8" Tube
PH-40	1/2" Tube

PF

Model	Size
PF-20	1/4 PT
PF-30	3/8 PT
PF-40	1/2 PT

PM

Model	Size
PM-20	1/4 PT
PM-30	3/8 PT
PM-40	1/2 PT

PP

Model	Size
PP-20	5/16" Tube
PP-30	3/8" Tube
PP-40	1/2" Tube

Multipass Quick Coupler

SML

SMT

SMM

SMX

SMV

SMY

Silencer

B Type Muffler

Code	Screw Thread (Size)	S (mm)
B-M5	M5	8
B-6	1/8"	12
B-8	1/4"	15
B-10	3/8"	19
-B15	1/2"	22
B-20	3/4"	27
B-25	1"	36

V Type Muffler

Code	Screw Thread (Size)	S (mm)
V-M5	M5	8
V-6	1/8"	12
V-8	1/4"	15
V-10	3/8"	19
V-15	1/2"	22
V-20	3/4"	30
V-25	1"	36

XB Type Exhaust Muffling Throttle Valve

Code	Screw Thread (Size)	S (mm)
XB-6	1/8"	12
XB-8	1/4"	14
XB-10	3/8"	17
XB-15	1/2"	24
XB-20	3/4"	27
XB-25	1"	34

SC Type Muffler

Code	Screw Thread (Size)	S (mm)
SC-M5	M5	8.5
SC-6	1/8"	12
SC-8	1/4"	15
SC-10	3/8"	19
SC-15	1/2"	23
SC-20	3/4"	30
SC-25	1"	35

SEB Type Muffler

Code	Screw Thread (Size)	S (mm)
SEB-M5	M5	7
SEB-6	1/8"	12
SEB-8	1/4"	15
SEB-10	3/8"	19
SEB-15	1/2"	23
SEB-20	3/4"	30
SEB-25	1"	36

SET Type Muffler Coppler Plating Feet

Code	Screw Thread (Size)	S (mm)
SET-6	1/8"	8
SET-8	1/4"	10
SET-10	3/8"	13
SET-15	1/2"	15
SET-20	3/4"	19
SET-25	1"	24

SCQ Type Muffler

Code	Screw Thread (Size)	S (mm)
SCQ-6	1/8"	7
SCQ-8	1/4"	8
SCQ-10	3/8"	10
SCQ-15	1/2"	14
SCQ-20	3/4"	17
SCQ-25	1"	21

D Type Muffler

Code	Screw Thread (Size)	S (mm)
D-6	1/8"	8
D-8	1/4"	10
D-10	3/8"	15
D-15	1/2"	19
D-20	3/4"	20
D-25	1"	27

C Type Exhaust Muffling Throttle Valve

Code	Screw Thread (Size)	S (mm)
C-6	1/8"	13
C-8	1/4"	14
C-10	3/8"	17
C-15	1/2"	22
C-20	3/4"	27
C-25	1"	34

SDV Type Muffler

Code	Screw Thread (Size)	S (mm)
SDV-6	1/8"	13
SDV-8	1/4"	16
SDV-10	3/8"	19
SDV-15	1/2"	24
SDV-20	3/4"	30
SDV-25	1"	36

XA Type Exhaust Muffling Throttle Valve

Code	Screw Thread (Size)	S (mm)
XA-6	1/8"	14
XA-8	1/4"	16
XA-10	3/8"	17
XA-15	1/2"	24
XA-20	3/4"	27
XA-25	1"	34

SD Type Muffler

Code	Screw Thread (Size)	S (mm)
SD-6	1/8"	12
SD-8	1/4"	15
SD-10	3/8"	19
SD-15	1/2"	22
SD-20	3/4"	27
SD-25	1"	34

SEB-B-1 Plveted And Plated The Nickel Wholly

Code	Screw Thread (Size)	S (mm)
SEB-B-1-6	1/8"	12
SEB-B-1-8	1/4"	15
SEB-B-1-10	3/8"	19
SEB-B-1-15	1/2"	23
SEB-B-1-20	3/4"	30
SEB-B-1-25	1"	35

SS-V Type Stainless Steel Muffler

Code	Screw Thread (Size)	S (mm)
SS-V-M5	M5	8
SS-V-6	1/8"	12
SS-V-8	1/4"	15
SS-V-10	3/8"	19
SS-V-15	1/2"	23
SS-V-20	3/4"	30
SS-V-25	1"	36

SSDV Type Stainless Steel Muffler

Code	Screw Thread (Size)	S (mm)
SSDV-6	1/8"	13
SSDV-8	1/4"	16
SSDV-10	3/8"	19
SSDV-15	1/2"	24
SSDV-20	3/4"	30
SSDV-25	1"	36

Silencer

SSM Type Muffler

Code	Screw Thread (Size)	S (mm)
SSM-M5	M5	8
SSM-6	1/8"	12
SSM-8	1/4"	15
SSM-10	3/8"	19
SSM-15	1/2"	23
SSM-20	3/4"	30
SSM-25	1"	36

SS-PDK Type Exhaust Muffling Throttle Valve

Code	Screw Thread (Size)	S (mm)
SS-PDK-6	1/8"	13
SS-PDK-8	1/4"	14
SS-PDK-10	3/8"	17
SS-PDK-15	1/2"	22
SS-PDK-20	3/4"	27
SS-PDK-25	1"	34

PTV Plastic Exhaust Muffling Throttle Valve

Code	Screw Thread (Size)	S (mm)
PTV-6	1/8"	10
PTV-8	1/4"	14
PTV-10	3/8"	17
PTV-15	1/2"	24
PTV-20	3/4"	30
PTV-25	1"	36

SB Type Muffler

Code	Screw Thread (Size)	S (mm)
SB-6	1/8"	11
SB-8	1/4"	14
SB-10	3/8"	17
SB-15	1/2"	22
SB-20	3/4"	27
SB-25	1"	33
SB-32	1-1/4"	43
SB-40	1-1/2"	51
SB-50	2"	60

LM Type Aluminum Muffler

Code	Screw Thread (Size)	S (mm)
LM-1	1/8"	20.5
LM-2	1/4"	20.5
LM-3	3/8"	32
LM-4	1/2"	32
LM-6	3/4"	51
LM-8	1"	51

AM Type Aluminum Muffler

Code	Screw Thread (Size)	S (mm)
AM-6	1/8"	16
AM-8	1/4"	19
AM-10	3/8"	22
AM-15	1/2"	29
AM-20	3/4"	38

PSU Type Plastic Muffler

Code	Screw Thread (Size)	S (mm)
PSU-M5	M5	7
PSU-6	1/8"	13
PSU-8	1/4"	17
PSU-10	3/8"	25
PSU-15	1/2"	25
PSU-20	3/4"	
PSU-25	1"	

PSE Type Plastic Muffler

Code	Screw Thread (Size)	S (mm)
PSE-M5	M5	7
PSE-6	1/8"	13
PSE-8	1/4"	17
PSE-10	3/8"	25
PSE-15	1/2"	25
PSE-20	3/4"	37
PSE-25	1"	48

SU Type Plastic Muffler

Code	Screw Thread (Size)	S (mm)
SU-6	1/8"	16
SU-8	1/4"	20
SU-10	3/8"	24
SU-15	1/2"	24
SU-20	3/4"	48
SU-25	1"	48

Air Gun

AG-B-S AG-A-S AG-B-L AG-A-L DG-10 XAG-B-L HG-8

Tube Cutter

Specifcation

Available Tube	Polyurethane and Nylon
Cutting Outer Dia	3.0~14.0
Material	Polyacetal,Stainless Steel

Polyurethane Tube

PU Tube

Ordering Code

PU 8 × 5 — B — 100M

- **Model code** PU Tube
- **Tube dia** OD
- **Tube dia** ID
- **Tube color**
- **Tube length** 200m/roll:(4mm,6mm) 100m/roll:(above 8mm)

Applications

- Pneumatic system,air tools
- Vacuum
- Automation
- Plant Instrumentation
- Paint supply Lines
- Construction applications
- Motion control devices

Specifcation

Working Medium	Compressed air
Working-Pressure	0~1.0MPa
Service temperature range	-20~80℃
Durometer	95 or 98 A

Feature

The Polyethulene tube excels in water-resistant,rseistance,weathering resistance and low temperature resistance.It is more flexibility and kink resistance,also the price is cheaper,more suitable to service piping with strict temperature rwquirements(compared with our Nylon series'tube).

Specifcation

Model	O.D.(mm)	I.D.(mm)	Thickness(mm)	Length M/Roll	Min.bend radius at 20℃(mm)	Min.burst pressure bar at 20℃(bar)	Max.working pressure at 20℃(bar)
PU 4x2.5	4	2.5	0. 75	200	10	30	10
PU 6x4	6	4	1. 00	200	15	30	10
PU 8x5	8	5	1. 50	100	20	30	10
PU 10x6.5	10	6.5	1. 75	100	30	30	10
PU 12x8	12	8	2. 00	100	35	30	10
PU 16x12	16	12	2. 00	100	65	24	8

■ Above listes are just refered the most basic sizes or styles of our products to you. Note:1/4",5/16",3/8",1/2",3/16" and other special sizes are also available.

Color

Color	Tranaparent	Black	Orange	Blue	Dark blue	Sky blue	Clear blue	Green	Red	Yellow	Grey	Milk white
Code	C	B	O	BU	DB	SB	CB	GN	RD	YW	GY	MW
Supplid	●	●	●	●	◆	◆	◆	◆	◆	◆	◆	◆

● means our standard colours of tubing,normally have enough stocks.
◆ means the colours of tubing can be produced if ordered quantity meets our requested(contact us for details).

PUL Series Polyurethane Spiral Tube

PU Spiral Tube

Ordering Code

PUL 8 × 5 — 7 — O

- **Model code** PUL Spirial Type
- **Outer dia.**
- **Inner dia.**
- **Length(m)**
- **Tube Color**

Feature

Coiling Tube is suitable for piping of air guns,air screwdrivers and other air tools Piping of movable parts can be achieved within ed space without distorting the joints.

Length Spes

2	3	5	7	10	14	20
2m	3m	5m	7m	10m	14m	20m

OMR Hidro Motorlar

Technical Date

Model	Displace-ment (ml/rev)	Cont. Speed (r/min)	Cont. Torque (N.m)	Cont. Power (Kw)	Cont. Pressure (Mpa)	Cont. Flow (L/min)	Weight (Kg)
OMR50	51.3	755	100	7.7	14	40	6.7
OMR80	80.6	750	190	15	17.5	60	6.9
OMR100	100.8	600	240	15	17.5	60	6.9
OMR125	124.9	475	292	14	17.5	60	7.2
OMR160	157.2	375	363	14	16.5	60	7.5
OMR200	199.2	300	358	11	13	60	8
OMR250	252	240	352	9	11	60	8.5
OMR315	314.5	190	360	7	8.5	60	9
OMR375	370	160	420	8.6	8.5	60	9.3
OM2-125	124.1	400	215	8.8	17	20	7.2
OM2-160	164.7	310	285	9	17	20	7.8
OM2-200	200	250	347	9	17	20	8.1

Hidrolik Valf Soketi

Ledli AC-DC VALF SOKETİ

GCY-1 TYPE 2 AC 220VZ5 IŞIKLI SOKET **| Z5 -3 ayaklı 220VA Şeffaf**

GCY-1 TYPE 3 DC 24VDCZ5 IŞIKLI SOKET **| Z5 -3 ayaklı 220VA** Şeffaf Standart hidrolik valf soketi

20V/25V/35V/45V Paletli Pompalar

PUMP SERIES	DISPLACEMENT (İN³)	MAX RPM	FLOW AT 1200 RPM (GPM)	MAX PRESSURE (PSİ)
20V / VQ	1.1 – 2.80	2400	5.71 – 14.55	3000
25V / VQ	2.47 – 4.12	2400	12.83 – 21.40	3000
35V / VQ	4.12 – 7.42	2400	21.40 – 38.55	3000
45V / VQ	8.46 – 11.80	2400	43.95 – 61.30	3000

Hidrolik Üniteler

Hidrolik Ünite İmalatı

- Yüksek verimli hidrolik ünite, takım tezgahları için önemli tasarruflar sağlar
- Tüm çalışma modlarında enerji tasarrufu sağlar
- Yüksek hassasiyetli makineler için düşük ısıtma ve düşük titreşim
- Kolay çalıştırma ve bakım için son derece güvenilir basit yapı
- Standart birime göre yaklaşık% 40 daha az enerji tüketimi

4WE6 series

Directional spool valve electrically operated type WE6 seies 32

NS 6 | up to 35 MPa | up to 80 dm^3/min

APPLICATION

Directional spool valves type **WE6...** electrically operated are intended for change in direction of fluid flow in a hydraulic system and thus it allows to change direction of movement of a receiver - mostly piston rod of a cylinder or hydraulic motor as well to use functions: *on* and *off*. These directional spool valves are used for subplate mounting in any position in a hydraulic system.

Directional spool valve is complied with the regulations of directive **2006/95/WE** for the following voltages:

- 50 – 250 V for **AC**
- 75 – 250 V for **DC**

DESCRIPTION OF OPERATION

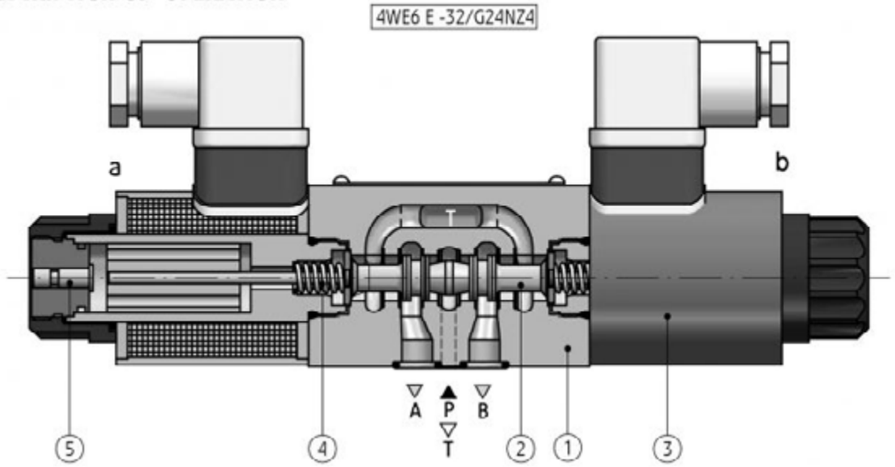

Main elements of directional spool valve type **WE6...** are: housing (1), solenoids (3), control spool (2), centering springs (4) and manual overrides (5). The spool (2) is shifted when it is moved into one of end positions by the force of solenoid (3) affecting it. The return of the spool into neutral position and centering are secured by the centering springs (4). The shape of the spool (control edge spacing) affects the configuration of connections among the ports: **A**, **B**, **P** and **T**. Function of ports:

P - supply port
T - oil return to the tank
A, **B** - ports for a receiver

In case of emergency, the spool can be shifted manually by means of the override (5) - only for version with manual override.

When the situation is anticipated, directional spool valve must be mounted in the way as to be available.

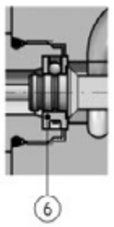

Version WE6.../**OF**...- only for spools: **A**, **C**, **D**. 2-position directional spool valve without return springs with detent. The spool (2) is positioned and supported with detent (6), and its shift results from supplying voltage to one solenoid (3).

CIRTLI HORTUM KILIFLARI

Çoklu Hortum ve **Kabloları** bir arada tutmayı sağlar.

Dış etkenlerden **Korur**.

KORUMA SEVİYESİ

- Halojensiz
- Kimyasallara dayanıklı
- Yağa dayanıklı
- UV'ye dayanıklı
- Aşınmaya dayanıklı
- Yüksek Mukavemetli

NYLOFIX ECT

Light-wall very flexible corrugated conduits

For insulation, mechanical protection and environmental preservation of cables in the electrical installation of machinery, industrial equipment and telecommunications.

- Made of specially modified polyamide (PA6)
- Special patented profile for housing the ORJ o-ring sealing to provide a higher IP protection
- Free of halogen, phosphorous and cadmium
- Self-extinguishing (HB according to UL94)
- Temperature range: -40ºC to +105ºC (150ºC short term)
- UV resistant (black colour)
- Colours: dark grey and black

Slit version available under request (add /C at the end of the reference)

Para el aislamiento, protección mecánica y preservación ambiental de cables en la instalación eléctrica de máquinas, equipos industriales y telecomunicaciones

- *Fabricados en poliamida especial modificada (PA6)*
- *Perfil especial patentado para alojar junta tórica de estanqueidad ORJ y proporcionar una protección IP superior*
- *Libres de halógenos, fósforo y cadmio*
- *Autoextinguibles (HB según UL94)*
- *Rango de temperaturas: de -40ºC a +105ºC (150ºC por breve tiempo)*
- *Resistentes a los rayos ultravioleta (color negro)*
- *Colores: gris oscuro y negro*

Versión con corte longitudinal disponible bajo demanda (añadir /C al final de la referencia)

reference | referencia GREY | GRIS	BLACK | NEGRO	ND	Ø int.	Ø ext.	Bending radius R Radio de curvatura R	Packing m Embalaje m
ECT-07G	ECT-07N	7	6.3	10.0	15	50
ECT-10G	ECT-10N	10	9.7	13.0	20	50
ECT-12G	ECT-12N	12	12.2	15.8	30	50
ECT-17G	ECT-17N	17	16.8	21.2	40	50
ECT-23G	ECT-23N	23	22.6	28.5	55	50
ECT-29G	ECT-29N	29	28.3	34.5	65	50
ECT-36G	ECT-36N	36	36.3	42.5	80	30
ECT-48G	ECT-48N	48	47.4	54.5	95	30

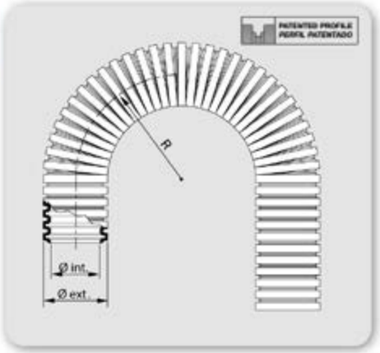

Dimensions in mm | *Dimensiones en mm*

IEC 61386

UL 1696 C22.2 No. 227.3

RoHS Compliant

Applications | *Aplicaciones*

AGT NYLOFIX

Medium-wall flexible corrugated conduits

For insulation, mechanical protection and environmental preservation of cables in the electrical installation of machinery, industrial equipment and telecommunications.

- Made of specially modified polyamide (PA 6)
- Special patented profile* for housing the ORJ o-ring sealing to provide a higher IP protection
- Free of halogen, phosphorus and cadmium
- Self-extinguishing (V2 acc. to UL94)
- Temperature range: -40ºC to +105ºC (150ºC short term)
- UV resistant (black colour)
- Colours: dark grey and black

Para el aislamiento, protección mecánica y preservación ambiental de cables en la instalación eléctrica de máquinas, equipos industriales y telecomunicaciones.

- *Fabricados en poliamida especial modificada (PA6)*
- *Perfil especial patentado* para alojar junta tórica de estanqueidad ORJ y proporcionar una protección IP superior*
- *Libres de halógenos, fósforo y cadmio*
- *Autoextinguibles (V2 según UL94)*
- *Rango de temperaturas: de -40ºC a +105ºC (150ºC por breve tiempo)*
- *Resistentes a los rayos ultravioleta (color negro)*
- *Colores: gris oscuro y negro*

reference | referencia GREY | GRIS	BLACK | NEGRO	ND	Ø int.	Ø ext.	Bending radius R Radio de curvatura R	Packing m Embalaje m
AGT-07G	AGT-07N	7	6.3	10.0	15	50
AGT-10G	AGT-10N	10	9.7	13.0	20	50
AGT-12G	AGT-12N	12	12.2	15.8	30	50
AGT-17G	AGT-17N	17	16.8	21.2	40	50
AGT-23G	AGT-23N	23	22.6	28.5	55	50
AGT-29G	AGT-29N	29	28.3	34.5	65	50
AGT-36G	AGT-36N	36	36.3	42.5	80	30
AGT-48G	AGT-48N	48	47.4	54.5	95	30
AGT-70G	AGT-70N	70	69.1	80.7	200	10**
AGT-95G	AGT-95N	95	91.7	106.0	265	10**

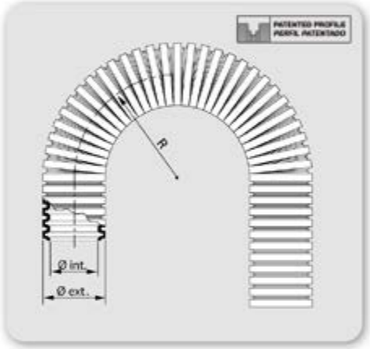

Dimensions in mm | *Dimensiones en mm*
* Except for ND 70 and ND 95 | *Excepto DN 70 y DN 95*
** Other lengths on request | *Otras longitudes consultar*

IEC 61386

UL 1696 C22.2 No. 227.3

RoHS Compliant

Applications | *Aplicaciones*

NYLOFIX MIR-M

Sraight metric thread connector

Straight fitting with male metric thread according to EN 60423 connector for fixing the ends of flexible corrugated conduits to the cable entries on control panels, terminal boxes on electric motors, etc., in accordance with standard EN 60204 (Safety of Machinery). They are notable for their high tensile strength and tightness

- Made of specially modified polyamide (PA6)
- Free of halogen, phosphorus and cadmium
- Self-extinguishing
- Shock-resistant
- Temperature range: -40ºC to +105ºC (150ºC short term)
- IP66 protection. IP68/IP69 with ORJ and PLJ sealings
- "Easy-click": quick assembly and removal of the conduit without tools
- Colours: dark grey and black

Racores rectos con rosca macho métrica según EN 60423 para la fijación de tubos anillados flexibles a las entradas de cables en cuadros de maniobra, cajas de bornes en motores, etc., conforme a la norma EN 60204 (seguridad de las máquinas). Se distinguen por su gran resistencia a la tracción y alta estanqueidad

- *Fabricados en poliamida especial modificada (PA6)*
- *Libres de halógenos, fósforo y cadmio*
- *Autoextinguibles*
- *Gran resistencia al impacto*
- *Gama de temperaturas: de -40ºC a +105ºC (150ºC por breve tiempo)*
- *Protección IP66. IP68/IP69 con juntas ORJ y PLJ*
- *"Easy-click": montaje y desmontaje instantáneo del tubo sin útiles*
- *Colores gris oscuro y negro*

reference | referencia GREY | GRIS	BLACK | NEGRO	ND	Ø int.	A	C	D		LR	Packing u Embalaje u
MIR-07M12G	MIR-07M12N	7	M12x1.5	6.5	35	19	17	15	11	100
MIR-10M12G	MIR-10M12N	10	M12x1.5	6.5	37	21	21	18	11	100
MIR-10M16G	MIR-10M16N	10	M16x1.5	10.0	37	21	21	18	11	100
MIR-10M20G	MIR-10M20N	10	M20x1,5	14.0	37	21	21	18	11	100
MIR-12M16G	MIR-12M16N	12	M16x1.5	10.0	37	26	25	20	11	100
MIR-12M20G	MIR-12M20N	12	M20x1.5	14.0	37	26	25	20	11	100
MIR-17M20G	MIR-17M20N	17	M20x1.5	14.5	44	31	30	27	11	100
MIR-17M25G	MIR-17M25N	17	M25x1.5	18.5	45	31	34	27	12	100
MIR-23M25G	MIR-23M25N	23	M25x1.5	18.5	48	37	37	34	12	50
MIR-23M32G	MIR-23M32N	23	M32x1.5	25.5	51	37	42	34	15	50
MIR-29M32G	MIR-29M32N	29	M32x1.5	25.5	52	46	46	42	15	30
MIR-29M40G	MIR-29M40N	29	M40x1.5	32.0	56	46	52	42	16	30
MIR-36M40G	MIR-36M40N	36	M40x1.5	32.0	60	54	54	50	19	20
MIR-36M50G	MIR-36M50N	36	M50x1.5	42.0	60	54	62	50	19	20
MIR-48M50G	MIR-48M50N	48	M50x1.5	42.0	61	69	69	66	19	10
MIR-48M63G	MIR-48M63N	48	M63x1.5	54.0	61	69	75	66	19	10

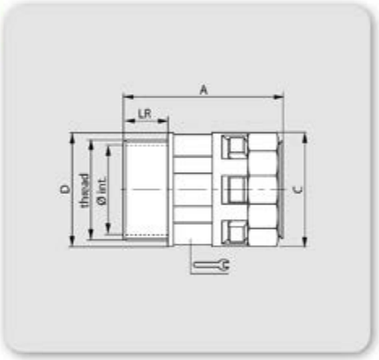

Dimensions in mm | *Dimensions en mm*

MIR-PG NYLOFIX

Straight PG thread connector

Straight fitting with male PG thread according to DIN 40430 connector for fixing the ends of flexible corrugated conduits to the cable entries on control panels, terminal boxes on electric motors, etc., in accordance with standard EN 60204 (Safety of Machinery). They are notable for their high tensile strength and tightness

- Made of specially modified polyamide (PA6)
- Free of halogen, phosphorus and cadmium
- Self-extinguishing
- Shock-resistant
- Temperature range: -40ºC to +105ºC (150ºC short term)
- IP66 protection. IP68/IP69 with ORJ and PLJ sealings
- "Easy-click": quick assembly and removal of the conduit without tools
- Colours: dark grey and black

Racores rectos con rosca macho paso eléctrico PG según DIN 40430 para la fijación de tubos anillados flexibles a las entradas de cables en cuadros de maniobra, cajas de bornes en motores, etc., conforme a la norma EN 60204 (seguridad de las máquinas). Se distinguen por su gran resistencia a la tracción y alta estanqueidad

- *Fabricados en poliamida especial modificada (PA6)*
- *Libres de halógenos, fósforo y cadmio*
- *Autoextinguibles*
- *Gran resistencia al impacto*
- *Gama de temperaturas: de -40ºC a +105ºC (150ºC por breve tiempo)*
- *Protección IP66. IP68/IP69 con juntas ORJ y PLJ*
- *"Easy-click": montaje y desmontaje instantáneo del tubo sin útiles*
- *Colores gris oscuro y negro*

reference | referencia GREY | GRIS	BLACK | NEGRO	ND	Ø int.	A	C	D		LR	Packing u Embalaje u
MIR-07P07G	MIR-07P07N	7	Pg 7	8.0	35	19	17	15	11.0	100
MIR-10P07G	MIR-10P07N	10	Pg 7	8.0	37	21	21	18	11.0	50
MIR-10P09G	MIR-10P09N	10	Pg 9	10.3	37	21	21	18	11.0	100
MIR-12P09G	MIR-12P09N	12	Pg 9	10.3	37	26	25	20	11.0	50
MIR-12P11G	MIR-12P11N	12	Pg 11	14.0	37	26	25	20	11.0	100
MIR-12P13G	MIR-12P13N	12	Pg 13.5	14.0	37	26	25	20	11.0	50
MIR-17P13G	MIR-17P13N	17	Pg 13.5	14.0	44	31	28	27	11.0	100
MIR-17P16G	MIR-17P16N	17	Pg 16	17.0	44	31	29	27	11.5	100
MIR-23P21G	MIR-23P21N	23	Pg 21	22.0	48	37	36	34	12.5	50
MIR-29P29G	MIR-29P29N	29	Pg 29	30.0	49	46	46	42	12.5	30
MIR-36P36G	MIR-36P36N	36	Pg 36	37.5	55	54	56	50	14.0	20
MIR-48P48G	MIR-48P48N	48	Pg 48	50.0	56	69	69	66	14.0	10

Dimensions in mm | *Dimensiones en mm*

NYLOFIX NBC-M

90° curved elbow metric thread connector

90° curved elbow fitting with male metric thread according to EN 60423 connector for fixing the ends of flexible corrugated conduits to the cable entries on control panels, terminal boxes on electric motors, etc., in accordance with standard EN 60204 (Safety of Machinery). They are notable for their high tensile strength and tightness

- Made of specially modified polyamide (PA6)
- Free of halogen, phosphorus and cadmium
- Self-extinguishing
- Shock-resistant
- Temperature range: -40ºC to +105ºC (150ºC short term)
- IP66 protection. IP68/IP69 with ORJ and PLJ sealings
- "Easy-click": quick assembly and removal of the conduit without tools
- Colours: dark grey and black

Racores curvados a 90° con rosca macho métrica según EN 60423 para la fijación de tubos anillados flexibles a las entradas de cables en cuadros de maniobra, cajas de bornes en motores, etc., conforme a la norma EN 60204 (seguridad de las máquinas). Se distinguen por su gran resistencia a la tracción y alta estanqueidad

- *Fabricados en poliamida especial modificada (PA6)*
- *Libres de halógenos, fósforo y cadmio*
- *Autoextinguibles*
- *Gran resistencia al impacto*
- *Gama de temperaturas: de -40ºC a +105ºC (150ºC por breve tiempo)*
- *Protección IP66. IP68/IP69 con juntas ORJ y PLJ*
- *"Easy-click" montaje y desmontaje instantáneo del tubo sin útiles*
- *Colores gris oscuro y negro*

reference | referencia GREY | GRIS	BLACK | NEGRO	ND		Ø int.	A	B	C	D	H	LR	Packing u Embalaje u
NBC-17M25G	NBC-17M25N	17	M25x1.5	17.5	52	75	28	34	26	12	50
NBC-23M32G	NBC-23M32N	23	M32x1.5	25.7	69	89	36	40	36	15	30
NBC-29M40G	NBC-29M40N	29	M40x1.5	32.3	81	101	43	50	40	19	10
NBC-36M50G	NBC-36M50N	36	M50x1.5	40.0	98	124	51	60	53	19	10
NBC-48M63G	NBC-48M63N	48	M63x1.5	53.6	106	141	66	75	54	19	5

Dimensions in mm | *Dimensiones en mm*

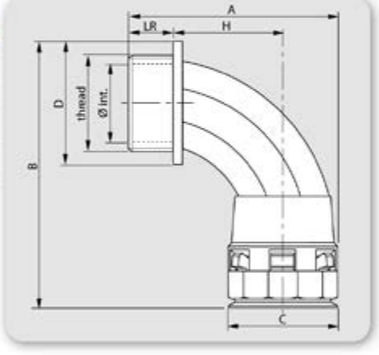

NBC-PG NYLOFIX

90° curved elbow PG thread connector

90° curved elbow fitting with male PG thread according to DIN 40430 connector for fixing the ends of flexible corrugated conduits to the cable entries on control panels, terminal boxes on electric motors, etc., in accordance with standard EN 60204 (Safety of Machinery). They are notable for their high tensile strength and tightness

- Made of specially modified polyamide (PA6)
- Free of halogen, phosphorus and cadmium
- Self-extinguishing
- Shock-resistant
- Temperature range: -40ºC to +105ºC (150ºC short term)
- IP66 protection. IP68/IP69 with ORJ and PLJ sealings
- "Easy-click": quick assembly and removal of the conduit without tools
- Colours: dark grey and black

Racores curvados a 90° con rosca macho paso eléctrico PG, según DIN 40430 para la fijación de tubos anillados flexibles a las entradas de cables en cuadros de maniobra, cajas de bornes en motores, etc., conforme a la norma EN 60204 (seguridad de las máquinas). Se distinguen por su gran resistencia a la tracción y alta estanqueidad

- *Fabricados en poliamida especial modificada (PA6)*
- *Libres de halógenos, fósforo y cadmio*
- *Autoextinguibles*
- *Gran resistencia al impacto*
- *Gama de temperaturas: de -40ºC a +105ºC (150ºC por breve tiempo)*
- *Protección IP66. IP68/IP69 con juntas ORJ y PLJ*
- *"Easy-click": montaje y desmontaje instantáneo del tubo sin útiles*
- *Colores gris oscuro y negro*

reference | referencia GREY | GRIS	BLACK | NEGRO	ND		Ø int.	A	B	C	D	H	LR	Packing u Embalaje u
NBC-17P16G	NBC-17P16N	17	Pg 16	14.7	51	72	28	30	25.5	11.5	50
NBC-23P21G	NBC-23P21N	23	Pg 21	18.5	65	84	36	36	36.0	11.0	30
NBC-29P29G	NBC-29P29N	29	Pg 29	25.5	74	99	43	46	39.5	13.0	10
NBC-36P36G	NBC-36P36N	36	Pg 36	32.0	92	120	51	56	53.5	13.0	10
NBC-48P48G	NBC-48P48N	48	Pg 48	42.0	102	135	66	69	56.0	13.0	5

Dimensions in mm | *Dimensiones en mm*
Ask for availability on Pg thread | *Rosca Pg consultar*

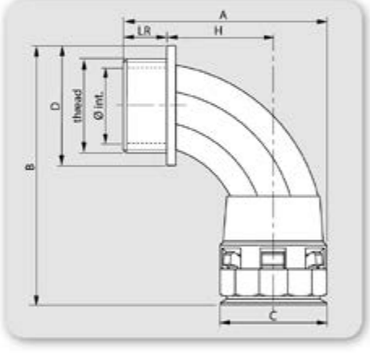

NYLOFIX BTC

90° elbow flance connector

The elbow flange connectors, thanks to their big internal space and reduced bulk, are specially useful for fixing the ends of flexible corrugated conduits to 90° cable entries in the interior of machines and for installations according to EN 60204 (Safety of Machinery). They are notable for their high tensile strength and tightness

- Made of specially modified polyamide (PA6)
- Free of halogen, phosphorus and cadmium
- Self-extinguishing
- Shock-resistant
- Temperature range: -40°C to +105°C (150°C short term)
- IP66 protection. IP68/IP69 with ORJ and BTJ sealings
- "Easy-click": quick assembly and removal of the conduit without tools
- Colours: dark grey and black

Los racores con brida, por su gran espacio interior y reducido encumbramiento, son especialmente útiles para la fijación de los extremos de tubos anillados en entradas de cables a 90° en el interior de máquinas y para instalaciones de acuerdo con la norma EN 60204 (seguridad de las máquinas). Se distinguen por su gran resistencia a la tracción y alta estanqueidad

- *Fabricados en poliamida especial modificada (PA6)*
- *Libres de halógenos, fósforo y cadmio*
- *Autoextinguibles*
- *Gran resistencia al impacto*
- *Gama de temperaturas: de -40°C a +105°C (150°C por breve tiempo)*
- *Protección IP66. IP68/IP69 con juntas ORJ y BTJ*
- *"Easy-click": montaje y desmontaje instantáneo del tubo sin útiles*
- *Colores gris oscuro y negro*

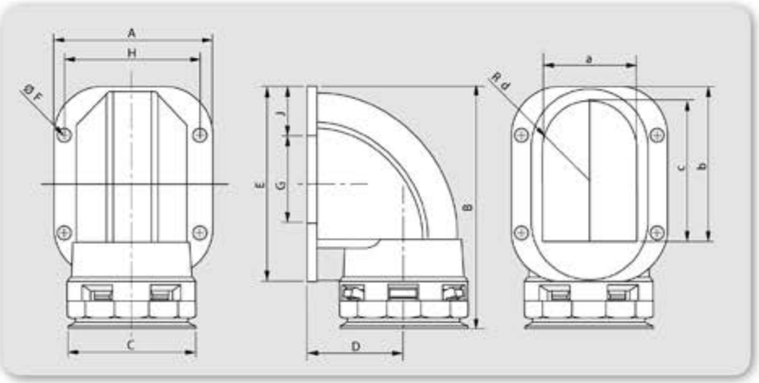

reference referencia	a	b	s	d
BTC-17_	17	33	25	8
BTC-23_	24	42	37	12
BTC-29_	30	49	45	15
BTC-36_	37	60	54	18
BTC-48_	48	55	61	24

reference | referencia GREY | GRIS	BLACK | NEGRO	ND	A	B	C	D	E	F	G	H	J	Packing u Embalaje u
BTC-17G	BTC-17N	17	44	68	29	24	48	5.5	-	34	18	50
BTC-23G	BTC-23N	23	53	82	37	26	57	5.5	-	43	21	30
BTC-29G	BTC-29N	29	60	89	45	32	66	6.5	24	48	21	10
BTC-36G	BTC-36N	36	70	104	53	38	76	6.5	30	57	23	10
BTC-48G	BTC-48N	48	80	118	67	46	82	6.5	55	68	13	5

Dimensions in mm | *Dimensiones en mm*

TSD NYLOFIX

" T " distributor

"T" distributor connectors are specially indicated to join three conduits of same nominal diameter when small bending radiuses have to be avoided. In accordance with Standard EN 60204 (Safety of Machinery). They are notable for their high tensile strength and tightness

- Made of specially modified polyamide (PA6)
- Free of halogen, phosphorus and cadmium
- Self-extinguishing
- Shock-resistant
- Temperature range: -40°C to +105°C (150°C short term)
- IP66 protection. IP68/IP69 with ORJ o-rings
- "Easy-click": quick assembly and removal of the conduit without tools
- Colours: dark grey and black

Los racores distribuidores en forma de "Y" son especialmente indicados para las desviaciones en las instalaciones de las máquinas sin tener que forzar los radios de curvatura de los tubos anillados en las instalaciones de acuerdo con la norma EN 60204 (seguridad de las máquinas). Se distinguen por su gran resistencia a la tracción y alta estanqueidad

- *Fabricados en poliamida especial modificada (PA6)*
- *Libres de halógenos, fósforo y cadmio*
- *Autoextinguibles*
- *Gran resistencia al impacto*
- *Gama de temperaturas: de -40°C a +105°C (150°C por breve tiempo)*
- *Protección IP66. IP68/IP69 con juntas ORJ*
- *"Easy-click": montaje y desmontaje instantáneo del tubo sin útiles*
- *Colores gris oscuro y negro*

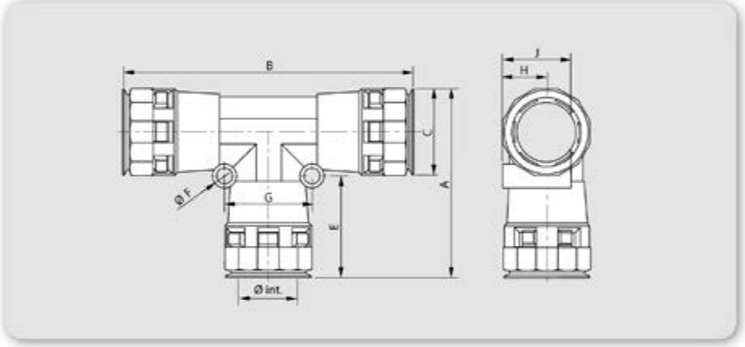

reference | referencia GREY | GRIS	BLACK | NEGRO	ND	Ø int.	A	B	C	E	F	G	H	J	Packing u Embalaje u
TSD-101010G	TSD-101010N	10	11.2	46	72	20	27	5	19	10	18	20
TSD-121212G	TSD-121212N	12	12.8	52	81	23	30	5	20	12	20	20
TSD-171717G	TSD-171717N	17	18.0	63	96	29	35	6	28	14	25	20
TSD-232323G	TSD-232323N	23	25.5	76	117	37	40	6	36	18	30	10
TSD-292929G	TSD-292929N	29	31.5	85	128	45	41	6	41	22	36	5
TSD-363636G	TSD-363636N	36	38.5	97	144	53	46	7	50	26	44	5

Dimensions in mm | *Dimensiones en mm*

NYLOFIX YKD

" Y " distributor

"Y" distributor connectors are specially indicated to join three conduits of diferent nominal diameter when small bending radiuses have to be avoided. In accordance with Standard EN 60204 (Safety of Machinery). They are notable for their high tensile strength and tightness

- Made of specially modified polyamide (PA6)
- Free of halogen, phosphorus and cadmium
- Self-extinguishing
- Shock-resistant
- Temperature range: -40ºC to +105ºC (150ºC short term)
- IP66 protection. IP68/IP69 with ORJ o-rings
- "Easy-click": quick assembly and removal of the conduit without tools
- Colours: dark grey and black

Los racores distribuidores en forma de "Y" son especialmente indicados para las desviaciones en las instalaciones de las máquinas sin tener que forzar los radios de curvatura de los tubos anillados en las instalaciones de acuerdo con la norma EN 60204 (seguridad de las máquinas). Se distinguen por su gran resistencia a la tracción y alta estanqueidad

- *Fabricados en poliamida especial modificada (PA6)*
- *Libres de halógenos, fósforo y cadmio*
- *Autoextinguibles*
- *Gran resistencia al impacto*
- *Gama de temperaturas: de -40ºC a +105ºC (150ºC por breve tiempo)*
- *Protección IP66. IP68/IP69 con juntas ORJ*
- *"Easy-click": montaje y desmontaje instantáneo del tubo sin útiles*
- *Colores gris oscuro y negro*

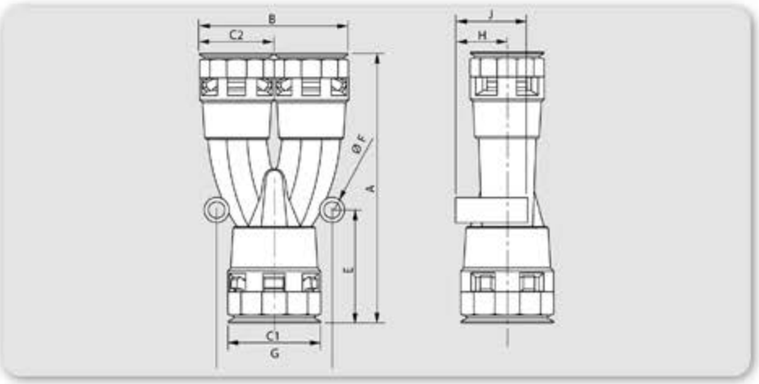

reference | referencia GREY | GRIS	BLACK | NEGRO	ND	A	B	C1	C2	E	F	G	H	J	Packing u Embalaje u
YKD-171212G	YKD-171212N	17+2x12	90	48	30	24	38	5	34	16	24	20
YKD-231717G	YKD-231717N	23+2x17	108	59	38	30	45	6	45	19	28	20
YKD-292323G	YKD-292323N	29+2x23	119	74	46	38	46	6	51	23	35	10
YKD-362929G	YKD-362929N	36+2x29	142	89	54	46	54	6	59	27	41	5
YKD-483636G	YKD-483636N	48+2x36	155	106	69	54	56	7	76	34	50	5

Dimensions in mm | *Dimensiones en mm*

GTR NYLOFIX

TITAN Straight connector

TITAN GTR connectors are used to connect ND70 and ND95 conduits to the wall or floor. With the optional sealing O-rings, an IP68 (static) can be obtained. To be used when connecting conduits with a great number of cables in the interior of machinery and general installations according to EN 60204 (Safety of Machinery)

- Made of specially modified polyamide (PA6)
- Free of halogen, phosphorus and cadmium
- Self-extinguishing
- Shock-resistant
- Temperature range: -40ºC to +105ºC (150ºC short term)
- IP66 protection. IP68 with ORJ and TTJ sealings
- Colours: dark grey and black

Los racores TITAN GTR se utilizan para conectar los tubos DN70 y DN95 a paredes o suelos. Con las juntas tóricas opcionales se puede obtener una estanqueidad IP68 (estática). Indicados para conectar tubos con un gran número de cables en el interior de maquinaria e instalaciones industriales en general de acuerdo con la norma EN 60204 (seguridad de las máquinas)

- *Fabricados en poliamida especial modificada (PA6)*
- *Libres de halógenos, fósforo y cadmio*
- *Autoextinguibles*
- *Gran resistencia al impacto*
- *Gama de temperaturas: de -40ºC a +105ºC (150ºC por breve tiempo)*
- *Protección IP66. IP68 con juntas ORJ y TTJ.*
- *Colores gris oscuro y negro.*

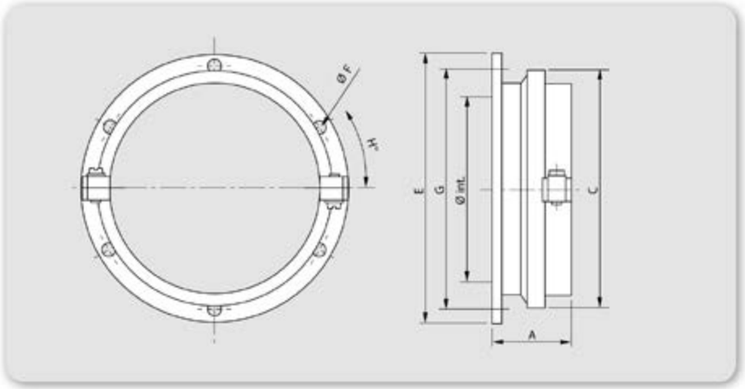

reference | referencia GREY | GRIS	BLACK | NEGRO	ND	Ø int.	A	C	E	F	G	H	Packing u Embalaje u
GTR-70G	GTR-70N	70	71.0	43	101	119	6.5	105	30°	5
GTR-95G	GTR-95N	95	98.0	43	130	146	6.5	132	30°	5

Dimensions in mm | *Dimensiones en mm*

NYLOFIX GTC

TITAN 90° elbow connector

TITAN GTC connectors are used to connect ND70 and ND95 conduits with a 90° angle to the wall or floor. With the optional sealing O-rings, an IP68 (static) can be obtained. To be used when connecting conduits with a great number of cables in the interior of machinery and general installations according to EN 60204 (Safety of Machinery)

- Made of specially modified polyamide (PA6)
- Free of halogen, phosphorus and cadmium
- Self-extinguishing
- Shock-resistant
- Temperature range: -40°C to +105°C (150°C short term)
- IP66 protection. IP68 with ORJ and TTJ sealings
- Colours: dark grey and black

Los racores TITAN GTC se utilizan para conectar los tubos DN70 y DN95 con un ángulo de 90° a paredes o suelos. Con las juntas tóricas opcionales se puede obtener una estanqueidad IP68 (estática). Indicados para conectar tubos con un gran número de cables en el interior de maquinaria e instalaciones industriales en general de acuerdo con la norma EN 60204 (seguridad de las máquinas)

- *Fabricados en poliamida especial modificada (PA6)*
- *Libres de halógenos, fósforo y cadmio*
- *Autoextinguibles*
- *Gran resistencia al impacto*
- *Gama de temperaturas: de -40°C a +105°C (150°C por breve tiempo)*
- *Protección IP66. IP68 con juntas ORJ y TTJ*
- *Colores gris oscuro y negro*

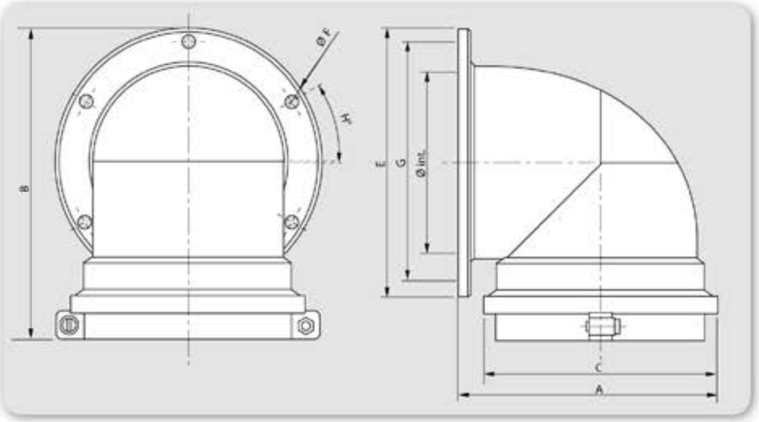

reference | referencia GREY | GRIS	BLACK | NEGRO	ND	Ø int.	A	B	C	E	F	G	H	Packing u Embalaje u
GTC-70G	GTC-70N	70	71.0	111	143	101	120	6.5	105	30°	5
GTC-95G	GTC-95N	95	99.0	146	171	128	146	6.5	132	30°	5

Dimensions in mm | *Dimensiones en mm*

SWL NYLOFIX

Support with lid

Supports with integrated lid for securing sections of corrugated conduits between the various parts of the electrical installation. With conduit entry guide. Specially indicated for demanding securing situations, e.g. on ceilings

- Made of specially modified polyamide (PA6)
- Free of halogen, phosphorus and cadmium
- Self-extinguishing
- Shock-resistant
- With integrated lid
- Temperature range: -40°C to +105°C (150°C short term)
- Colours: dark grey and black
- For side by side installation, use RWL.. profile

Soportes con tapa integrada para fijar tramos de tubo corrugado entre distintas partes de la instalación eléctrica. Con guía de entrada para el tubo. Especialmente indicados para condiciones de fijación exigentes, como por ejemplo en techos

- *Fabricados en poliamida especial modificada (PA6)*
- *Libres de halógenos, fósforo y cadmio*
- *Autoextinguibles*
- *Gran resistencia al impacto*
- *Con tapa integrada*
- *Gama de temperaturas: de -40°C a +105°C (150°C por breve tiempo)*
- *Colores gris oscuro y negro*
- *Para su instalación en paralelo, utilizar el carril RWL..*

reference | referencia GREY | GRIS	BLACK | NEGRO	ND	A	B	C	H	Metric Métrica	Packing u Embalaje u
SWL-07G	SWL-07N	7	22	17	20	13	M4	100
SWL-10G	SWL-10N	10	25	22	20	13	M5	100
SWL-12G	SWL-12N	12	27	25	20	15	M5	100
SWL-17G	SWL-17N	17	33	31	20	19	M5	100
SWL-23G	SWL-23N	23	42	40	20	23	M6	50
SWL-29G	SWL-29N	29	47	46	20	26	M6	30
SWL-36G	SWL-36N	36	56	56	20	31	M6	20
SWL-48G	SWL-48N	48	70	70	20	39	M6	10

Dimensions in mm | *Dimensiones en mm*

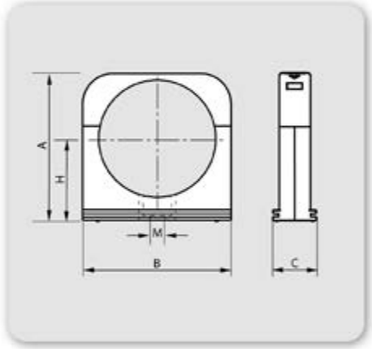

PA6 Spiral Rekorlari

Feature

Description

- Product material: PA (polyamide), the outer fastening ring: polyformaldehyde (POM)
- Specification of thread: Metric/PG/G thread
- Structure: -40°C ~ +110°C
- Color: Black. Other colors are customizable
- How to use: GNE-SM type fast joints are the fittings of the flexible pipes, which can be either connected with the housing of equipments or connected with electric equipment with inner threaded access hole as per the thread selected. Simply insert the flexible pipe into the union.

Specification

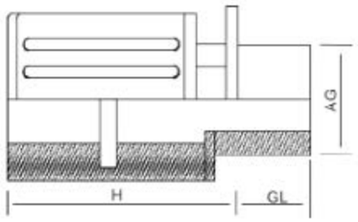

Order No.	Suitable Flexible Conduit	PG Dimension Of Thread	AG Outer Diameter	AG Inner Diameter	GL (mm)	H	Packaging Unit Units/ Pack
GNE-SM-PG7	AD10.0	PG7	12.3	7.5	10	18	100
GNE-SM-PG9	AD13.0	PG9	15	10	10	19	100
GNE-SM-PG11	AD15.8	PG11	18.4	12.5	10	23	100
GNE-SM-PG13.5	AD18.5	PG13.5	20.2	14.3	12	25	50
GNE-SM-PG16	AD21.2	PG16	22.3	17	13	27	50
GNE-SM-PG21	AD28.5	PG21	28	22	14	33	50
GNE-SM-PG29	AD34.5	PG29	36.7	29	14	35	20
GNE-SM-PG36	AD42.5	PG36	46.7	36	15	38.5	10
GNE-SM-PG48	AD54.5	PG48	59	50	16	39	10

Order No.	Suitable Flexi-ble Conduit	Metric Dimension Of Thread	AG Outer Diameter	AG Inner Diameter	GL(mm)	H	Packaging Unit Units/Pack
GNE-SM-M10-10	AD10.0	M10×1.5	10	7,5	10	18	100
GNE-SM-M12-10	AD10.0	M12×1.5	12	7,5	10	18	100
GNE-SM-M16-10	AD10.0	M16×1.5	16	7,5	10	19	100
GNE-SM-M16-13	AD13.0	M16×1.5	16	10	10	19	100
GNE-SM-M16-15.8	AD15.8	M16×1.5	16	10,5	10	23	100
GNE-SM-M18-15.8	AD15.8	M18×1.5	18	12,5	10	23	100
GNE-SM-M20-18.5	AD18.5	M20×1.5	20	14,3	12,5	25	50
GNE-SM-M20-21.2	AD21.2	M20×1.5	20	17	13	27	50
GNE-SM-M24-21.2	AD21.2	M24×1.5	24	17	13	27	50
GNE-SM-M25-25	AD25.0	M25×1.5	25	19	14	30	50
GNE-SM-M25-28.5	AD28.5	M25×1.5	25	20,5	20	30	50
GNE-SM-M27-28.5	AD28.5	M27×1.5	27	22	14	33	50
GNE-SM-M30-28.5	AD28.5	M30×2.0	30	22	14	33	50
GNE-SM-M32-34.5	AD34.5	M32×1.5	32	26	20	35	20
GNE-SM-M36-34.5	AD34.5	M36×2.0	36	30	14	35	20
GNE-SM-M48-42.5	AD42.5	M48×2.0	48	36	15	38.5	10
GNE-SM-M60-54.5	AD54.5	M60×2.0	60	50	16	39	10

PA6 Kablo Koruma Spiralleri

Feature

Description

- Product material: PA6 polyamide
- Working temperature: -40°C~+125°C, +140°C can be reached but kept only for a short time
- Certification: European Environmental Protection Certification SGS:S H6134468/CHEM
- Structure: Wavy shape both interiorly and exteriorly
- Color: Black. Other colors are customizable upon requirements.

SPA-07B	6.5×10.0
SPA-10B	10.0×13.0
SPA-12B	12.0×15.8
SPA-14B	14.3×18.5
SPA-17B	17.0×21.2
SPA-23B	23.0×28.5
SPA-29B	29.0×34.5
SPA-36B	36.0×42.5
SPA-48B	48.0×54.5
SPA-63B	63.0×74.0
SPA-76B	76.0×88.0
SPA-94B	94.0×108.0

Şeffaf Sensör Koruma Rekoru

Feature

Description

- Transparan dişi bağlantı Elektronik Sensörler için İnce Metrik Dişi adaptör, elektronik sensörler , gövdesinin şeffaflığına bağlı olarak sökme işlemine gerek kalmadan istediğiniz zaman sensör çalışıp çalışmadığını görebilirsiniz,

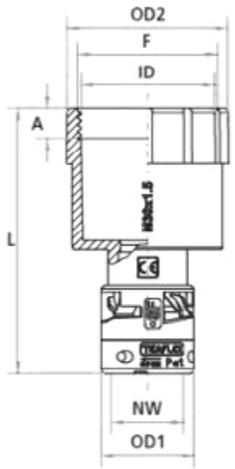

M08x1	7	10	7	8	34	17	14
M12x1	7	10	11	6,5	52	17	17
M18x1	7	10	17	6,5	59	17	23
M30X1,5	7	10	28,5	6,5	55,5	17	35
M12x1	10	12	11	6,5	53,4	20	17
M18x1	10	12	17	6,5	60,4	20	23
M30X1,5	10	12	28,5	6,5	56,9	20	35
F Fine Metric Thread	*Conduit Code NW*	*Fits to metric Conduit*	*ID inside ∅ Thread mm*	*A mm*	*L mm*	*OD1 mm*	*OD2 mm*

T Spiral Rekoru

Specification

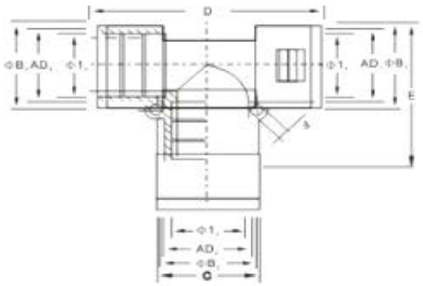

Order No.	Suita le Flexible Conduit	Φ 1_1(mm)	Φ 1_2(mm)	Φ 1_3(mm)	Φ B_1(mm)	Φ B_2(mm)	Φ B_3(mm)	D(mm)	E(mm)	C(mm)	F(mm)	Packaging Unit Units/Pack
GNE-T-PA-3×13.0	3×13.0	10	10	10	21	21	21	51	36	21	4	50
GNE-T-PA-3×15.8	3×15.8	14	14	14	25	25	25	63	44	24,5	4	50
GNE-T-PA-3×21.2	3×21.2	18	18	18	29,5	29,5	29,5	71.5	50	29,5	4	50
GNE-T-PA-28.5/2×15.8	28.5/2×15.8	25,5	14	14	32	25	25	78	44	24,5	4	25
GNE-T-PA-28.5/2×21.2	28.5/2×21.2	18	25,5	18	32	36.5	32	78	51	38.5	4	25
GNE-T-PA-3×28.5	3×28.5	25,5	25,5	25,5	36.5	36.5	36.5	77	57.5	37	4	25

Y Spiral Rekoru

Specification

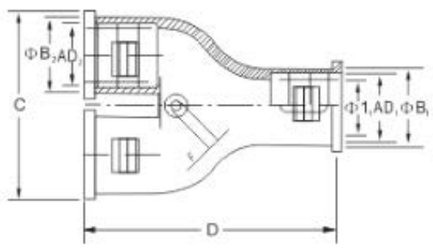

Order No.	Suitable Flexible Conduit		Φ B1(mm)	Φ B2(mm)	D (mm)	C (mm)	F(mm)	Packaging Unit Units/Pack
	AD1	AD2						
GNE-Y-PA–AD10.0/2×10.0	10	2×10.0	17	17	50	37	1×4.0	10
GNE-Y-PA-AD21.2/2×15.8	21,2	2×15.8	29,7	23	75	52	1×4.0	10
GNE-Y-PA-AD28.5/2×15.8	28,5	2×15.8	37,5	23	75	52	1×4.0	10
GNE-Y-PA-AD18.5/2×18.5	18,5	2×18.5	26,2	26,2	75	56	1×4.0	10
GNE-Y-PA-AD21.2/2×21.2	21,2	2×21.2	29,7	29,7	76.5	63	1×4.0	10
GNE-Y-PA-AD28.5/2×21.2	28,5	2×21.2	37,4	29,7	76.5	63	1×4.0	10

MAX. 15

PLASTİK HAFİF SERİ

ÜRÜN KODU	AÇIKLAMA	İ.yük./ İ.gen./ D.yük./D.gen.(mm)	RADÜS	X YUKSEKLIK (mm)				
				R.38	R.50	R.75	R.100	-
CCC1515 O	15 X 15 Açık Seri Kablo Taşıma Kanalı	15 / 15 / 20 / 20	38R	96	133	183	233	
CCC2025 O	20 x 25 Açık Seri Kablo Taşıma Kanalı	23 / 25 / 33 / 41	50R/75R/100R					
CCC2040 O	20 x 40 Açık Seri Kablo Taşıma Kanalı	23 / 40 / 33 / 56	50R/75R/100R					
CCC2040 CO	20 x 40 Yarı Açık Seri Kablo Taşıma Kanalı	23 / 40 / 33 / 56	75R/100R					
CCC2040 C	20 x 40 Kapalı Seri Kablo Taşıma Kanalı	23 / 40 / 33 / 56	50R/75R/100R					
CCC2060 O	20 x 60 Açık Seri Kablo Taşıma Kanalı	23 / 60 / 33 / 76	50R/75R/100R					

MAX. 25

PLASTİK ORTA SERİ

ÜRÜN KODU	AÇIKLAMA	İ.yük./ İ.gen./ D.yük./D.gen.(mm)	RADÜS	X YUKSEKLIK (mm)				
				R.50	R.75	R.100	-	-
CCC3040 O	30 x 40 Açık Seri Kablo Taşıma Kanalı	30 / 40 / 40 / 56	50R/75R/100R	140	190	240		
CCC3040 CO	30 x 40 Yarı Açık Seri Kablo Taşıma Kanalı	30 / 40 / 40 / 56	75R/100R					
CCC3040 C	30 x 40 Kapalı Seri Kablo Taşıma Kanalı	30 / 40 / 40 / 56	75R/100R					
CCC 3060 O	30 x 60 Açık Seri Kablo Taşıma Kanalı	30 / 60 / 40 / 76	50R/75R/100R					
CCC 3060 CO	30 x 60 Yarı Açık Seri Kablo Taşıma Kanalı	30 / 60 / 40 / 76	75R/100R					
CCC3060 C	30 x 60 Kapalı Seri Kablo Taşıma Kanalı	30 / 60 / 40 / 76	75R/100R					

MAX. 35

PLASTİK AĞIR SERİ / 40'LIK

ÜRÜN KODU	AÇIKLAMA	İ.yük./ İ.gen./ D.yük./D.gen.(mm)	RADÜS	X YUKSEKLIK (mm)				
				R100	R125	R150	R200	R250
CCC4050 O	40 x 50 Açık Seri Kablo Taşıma Kanalı	40 / 50 / 54 / 74	100R/125/150/200/250	254	304	354	454	554
CCC4050 CO	40 x 50 Yarı Açık Seri Kablo Taşıma Kanalı	40 / 50 / 54 / 74	100R/125/150/200/250					
CCC4050 C	40 x 50 Kapalı Seri Kablo Taşıma Kanalı	40 / 50 / 54 / 74	100R/125/150/200/250					
CCC4080 O	40 x 80 Açık Seri Kablo Taşıma Kanalı	40 / 80 / 54 / 104	100R/125/150/200/250					
CCC4080 CO	40 x 80 Yarı Açık Seri Kablo Taşıma Kanalı	40 / 80 / 54 / 104	100R/125/150/200/250					
CCC4080 C	40 x 80 Kapalı Seri Kablo Taşıma Kanalı	40 / 80 / 54 / 104	100R/125/150/200/250					
CCC40100 O	40 x 100 Açık Seri Kablo Taşıma Kanalı	40 / 100 / 54 / 124	100R/125/150/200/250					
CCC40100 CO	40 x 100 Yarı Açık Seri Kablo Taşıma Kanalı	40 / 100 / 54 / 124	100R/125/150/200/250					
CCC40100 C	40 x 100 Kapalı Seri Kablo Taşıma Kanalı	40 / 100 / 54 / 124	100R/125/150/200/250					

MAX. 55

PLASTİK AĞIR SERİ / 60'LIK

ÜRÜN KODU	AÇIKLAMA	İ.yük./ İ.gen./ D.yük./D.gen.(mm)	RADÜS	X YUKSEKLIK (mm)				
				R150	R200			
CCC60100 O	60 x 100 Açık Seri Kablo Taşıma Kanalı	60 / 100 / 80 / 132	150R/200R	380	480			
CCC60100 CO	60 x 100 Yarı Açık Seri Kablo Taşıma Kanalı	60 / 100 / 80 / 132	150R/200R					
CCC60100 C	60 x 100 Kapalı Seri Kablo Taşıma Kanalı	60 / 100 / 80 / 132	150R/200R					
CCC60120 O	60 x 120 Kapalı Seri Kablo Taşıma Kanalı	60 / 120 / 80 / 152	150R/200R					
CCC60140 O	60 x 140 Açık Seri Kablo Taşıma Kanalı	60 / 140 / 80 / 172	150R/200R					
CCC60140 CO	60 x 140 Yarı Açık Seri Kablo Taşıma Kanalı	60 / 140 / 80 / 172	150R/200R					
CCC60140 C	60 x 140 Kapalı Seri Kablo Taşıma Kanalı	60 / 140 / 80 / 172	150R/200R					
CCC60200 O	60 x 200 Açık Seri Kablo Taşıma Kanalı	60 X 200 / 80 / 232	150R/200R					
CCC60200 CO	60 x 200 Yarı Açık Seri Kablo Taşıma Kanalı	60 X 200 / 80 / 232	150R/200R					
CCC60200 C	60 x 200 Kapalı Seri Kablo Taşıma Kanalı	60 X 200 / 80 / 232	150R/200R					
CCC040-D	Seperatör							
CCC060-D	Seperatör							

TAPA RENK SECENEKLERİ | SARI | MAVİ | KIRMIZI | TURUNCU | YEŞİL

Bez Körükler

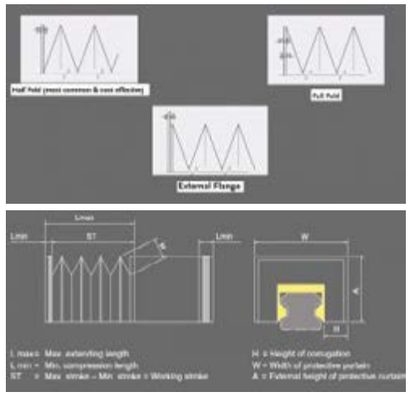

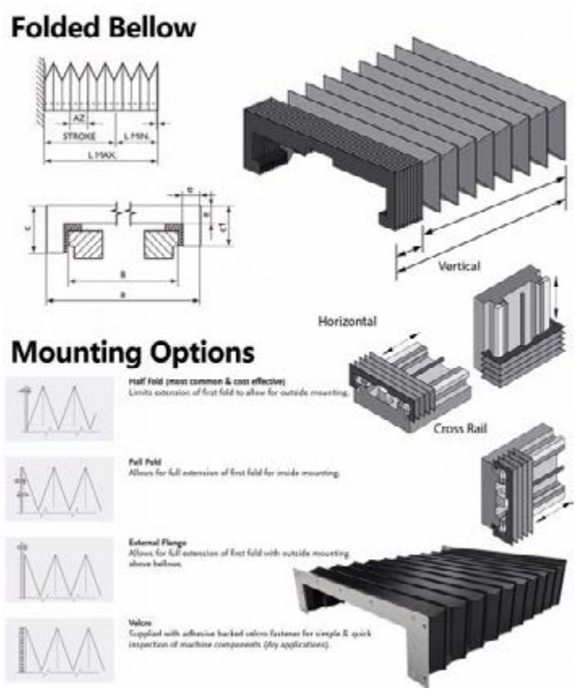

CNC Koruma Körükleri

Feature

Description

- CNC Koruma Körükleri Hareket ve sınırları temel olarak üzerinde yataklandığı kızak ve raylara bağlıdır, aşırı sıcak ve keskin talaşlara karşı mükemmel koruma sağlarlar,
- Materyal olarak paslanmaz çelik kullanılmaktadır,v

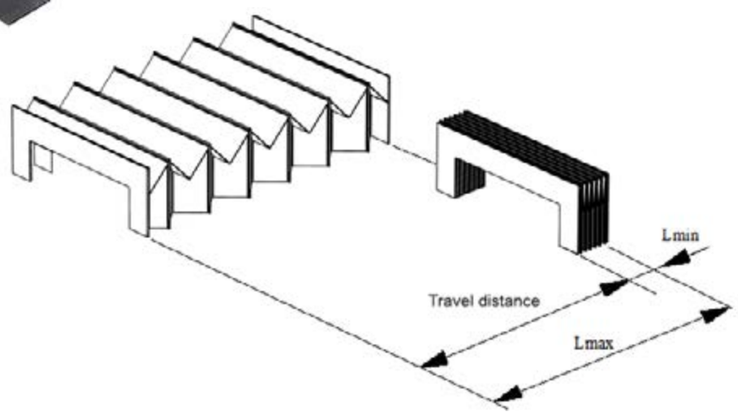

Lineer Kızak Koruma Körükleri

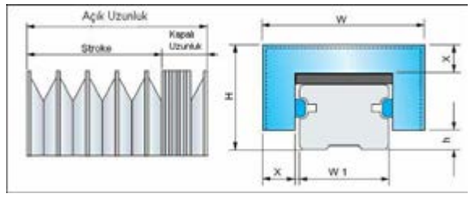

Mil Koruma Körükleri

Description

- Bu ürün vidalı mil, hidrolik ve pnömatik pistonların ve dönen transmisyonlarda yatay ve dikey konuda maksimum koruma sağlar.

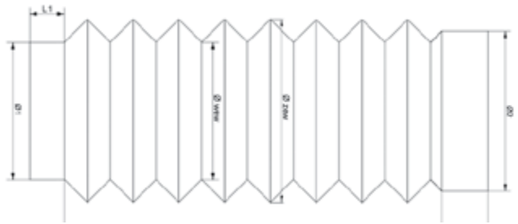

Platform Körükleri

NOTES

KAREL TECHNIK | Innovation Creates Future

www.kareltechnik.com

Karel Technik Hidrolik Pnömatik Mak.San.

Üçevler Mah. Nilüfer Ticaret Merkezi 60 Sk. No:4/L
Nilüfer / BURSA / TÜRKİYE

Tel : +90 224 441 06 88
Fax: +90 224 441 06 89

E-Mail: **info@kareltechnik.com**